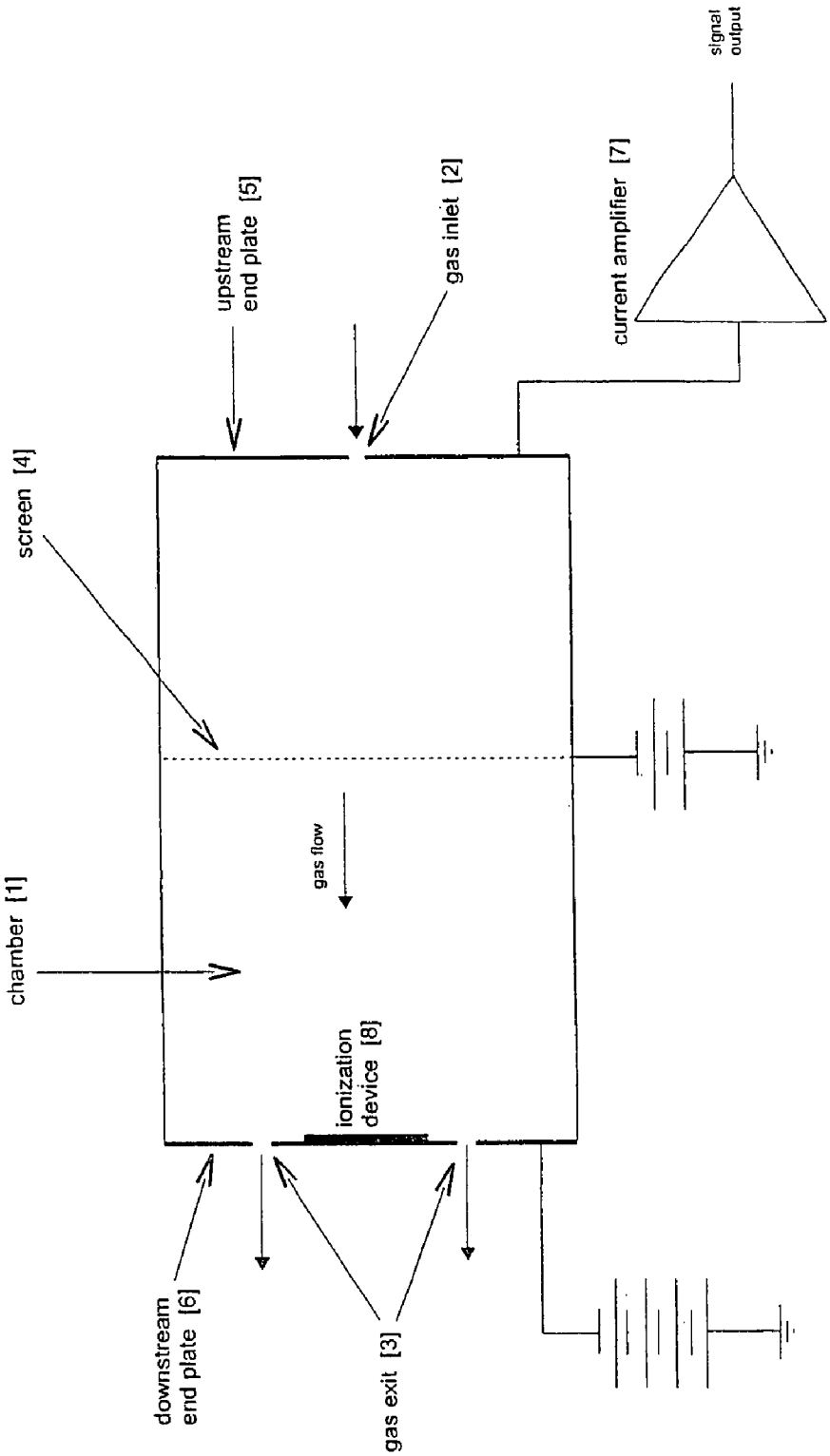
chamber [1]
screen [4]
upstream end plate [5]
gas inlet [2]
current amplifier [7]
signal output
gas flow
ionization device [8]
downstream end plate [6]
gas exit [3]

FIG. 2