US009409687B2

(12) **United States Patent**
Minnette et al.

(10) **Patent No.: US 9,409,687 B2**
(45) **Date of Patent: Aug. 9, 2016**

(54) **STAND UP PACKAGE**

(71) Applicant: **Berry Plastics Corporation**, Evansville, IN (US)

(72) Inventors: **Jeffrey C Minnette**, Evansville, IN (US); **Ryan P Davidson**, Evansville, IN (US)

(73) Assignee: **Berry Plastics Corporation**, Evansville, IN (US)

(*) Notice: Subject to any disclaimer, the term of this patent is extended or adjusted under 35 U.S.C. 154(b) by 0 days.

(21) Appl. No.: **14/753,410**

(22) Filed: **Jun. 29, 2015**

(65) **Prior Publication Data**

US 2015/0298877 A1 Oct. 22, 2015

Related U.S. Application Data

(63) Continuation of application No. 13/847,929, filed on Mar. 20, 2013, now Pat. No. 9,096,347.

(60) Provisional application No. 61/613,301, filed on Mar. 20, 2012.

(51) **Int. Cl.**

B65D 61/00	(2006.01)
B65D 6/00	(2006.01)
B65D 5/62	(2006.01)

(52) **U.S. Cl.**

CPC ***B65D 61/00*** (2013.01); ***B65D 5/62*** (2013.01); ***B65D 11/20*** (2013.01)

(58) **Field of Classification Search**

CPC B65D 11/20; B65D 5/62; B65D 61/00

USPC 220/9.2, 9.4, 668, 647, 646, 62.11, 220/62.18, 62.21, 9.1; 383/12, 119, 104

See application file for complete search history.

(56) **References Cited**

U.S. PATENT DOCUMENTS

2,422,239	A	6/1947	Holt	
4,361,235	A *	11/1982	Gautier	B31B 23/00 206/6
4,900,163	A	2/1990	Mack	
5,165,568	A	11/1992	Wischusen, III	
5,772,332	A	6/1998	Geller	
6,334,710	B1 *	1/2002	Kuge	B65D 31/08 383/104
6,513,703	B2	2/2003	Becker	
2005/0281494	A1	12/2005	Allen et al.	
2011/0052106	A1	3/2011	Holmes et al.	

OTHER PUBLICATIONS

International Search Report dated Jun. 6, 2013, relating to International Application No. PCT/US2013/033153.

* cited by examiner

Primary Examiner — Robert J Hicks
Assistant Examiner — Kareen Thomas
(74) *Attorney, Agent, or Firm* — Barnes & Thornburg LLP

(57) **ABSTRACT**

A stand-up package is formed to include an interior region for containing a product. The package is configured to be in an upright, standing position. The stand-up package includes a film-rigidifying frame and a film pouch. The film-rigidifying frame is coupled to the film pouch so that the film pouch assumes an upright position.
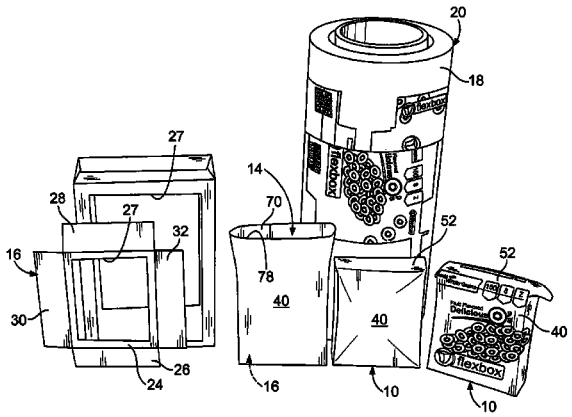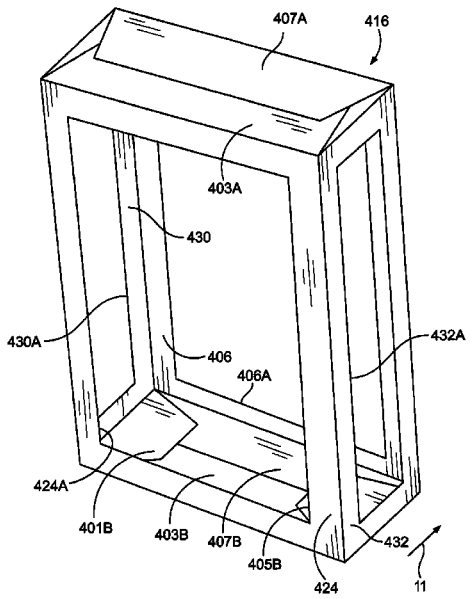
15 Claims, 11 Drawing Sheets