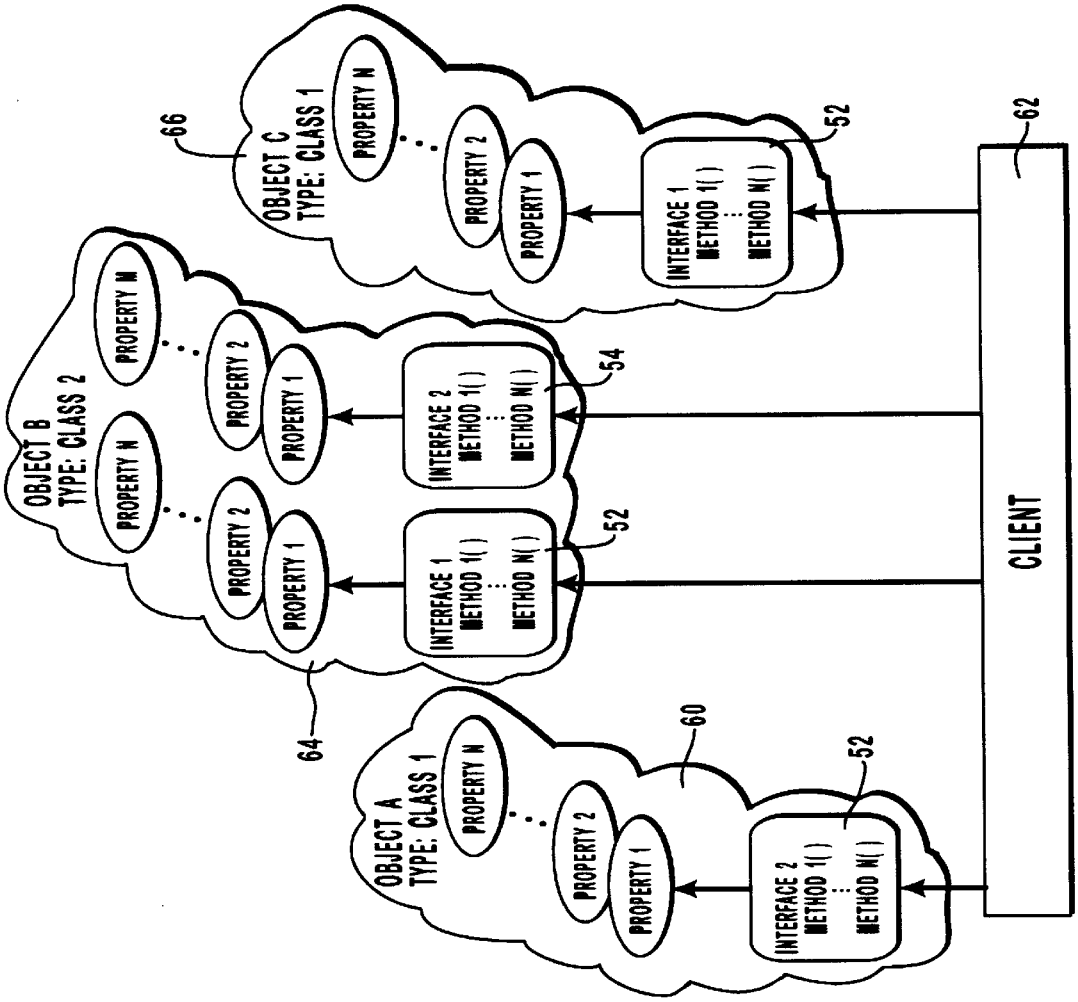
OBJECT C
TYPE: CLASS 1
PROPERTY N
PROPERTY 2
PROPERTY 1
INTERFACE 1
METHOD 1( )
METHOD N( )
66
52
62
OBJECT B
TYPE: CLASS 2
PROPERTY M
PROPERTY N
PROPERTY 2
PROPERTY 1
INTERFACE 2
METHOD 1( )
METHOD N( )
54
64
OBJECT A
TYPE: CLASS 1
60
CLIENT

FIG. 1B

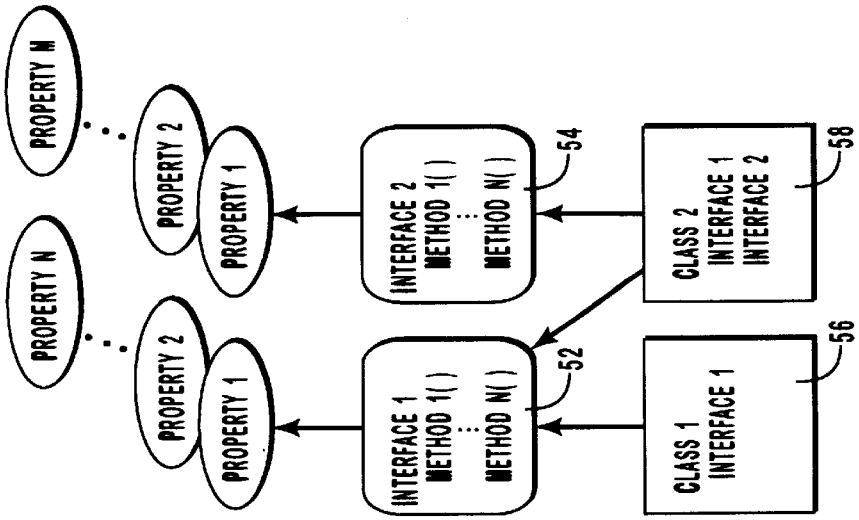
PROPERTY M
PROPERTY N
PROPERTY 2
PROPERTY 1
INTERFACE 2
METHOD 1( )
METHOD N( )
54
INTERFACE 1
METHOD 1( )
METHOD N( )
52
CLASS 2
INTERFACE 1
INTERFACE 2
58
CLASS 1
INTERFACE 1
56

FIG. 1A