United States Patent [19]

Mead et al.

[11] **3,996,786**

[45] **Dec. 14, 1976**

[54] **MEANS FOR ON-LINE DETERMINATION OF BOILING POINT PROPERTIES OF CRUDE OIL**

[75] Inventors: **Theodore C. Mead**, Port Arthur; **Charles W. Harrison**, Nederland; **Irene W. Kwan**, Houston, all of Tex.

[73] Assignee: **Texaco Inc.**, New York, N.Y.

[22] Filed: **Dec. 29, 1975**

[21] Appl. No.: **644,500**

[52] **U.S. Cl.** ..... **73/17 A**; 73/53

[51] **Int. Cl.**[2] **G01N 25/08**

[58] **Field of Search** ..... 73/17 A, 53, 61.3, 61.1

[56] **References Cited**

UNITED STATES PATENTS

3,239,432	3/1966	Rhodes et al.	73/53
3,253,454	5/1966	Neil	73/17
3,720,096	3/1973	Woodle	73/53

Primary Examiner—Herbert Goldstein

Attorney, Agent, or Firm—T. H. Whaley; C. G. Ries; Ronald G. Gillespie

[57] **ABSTRACT**

On-line sensors sense the kinematic viscosity, the infrared absorption, at a predetermined wavelength, the ultraviolet absorption of a predetermined wavelength, and the sulfur content of crude oil and corresponding signals are provided to a computer circuit. The computer circuit solves the equation:

$$M\%BP=\{-C_1+C_2[\ln(IRxC_3)]+C_4[\ln UV]-C_5 S-C_6[\ln(IRxC_3)](\ln UV)+C_7[\ln(IRxC_3)]S\}\ln KV$$

where M%BP is a particular percent boiling point property of crude oil, IR is the infrared absorption of the crude oil, S is the sulfur content of the crude oil, KV is the kinematic viscosity of the crude oil, UV is the ultraviolet absorption of the crude oil and C_1 through C_7 are constants.
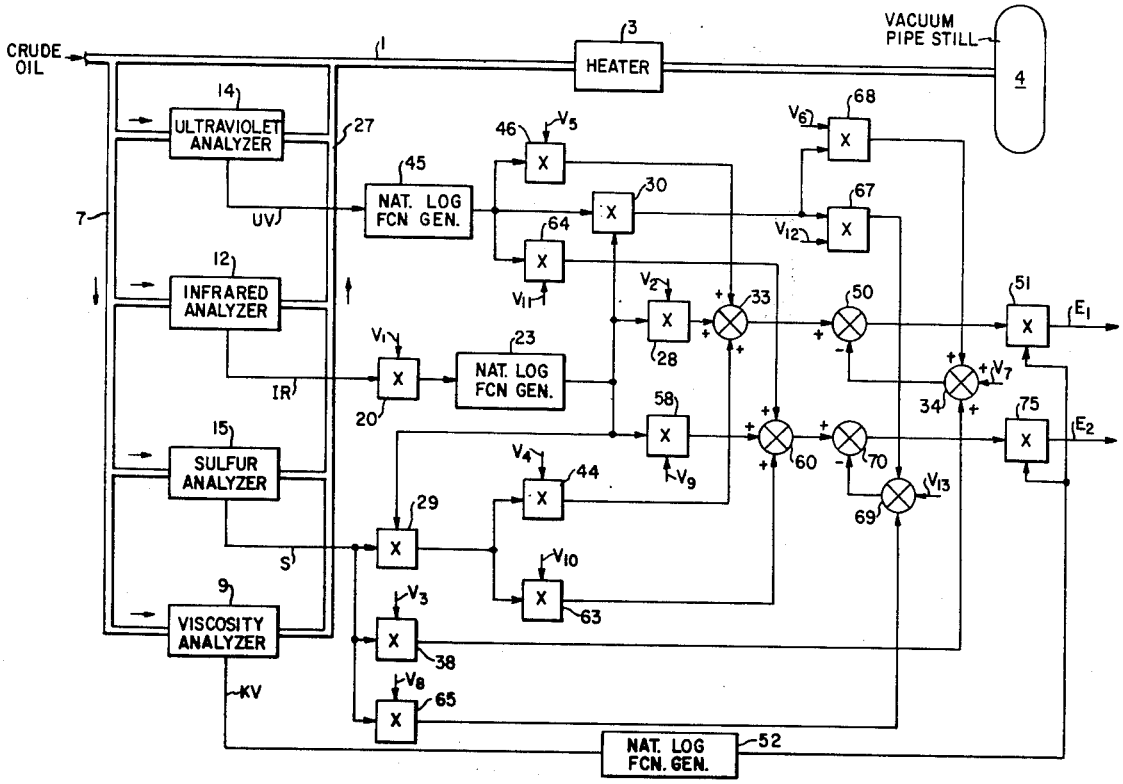
6 Claims, 1 Drawing Figure