FIG. 2

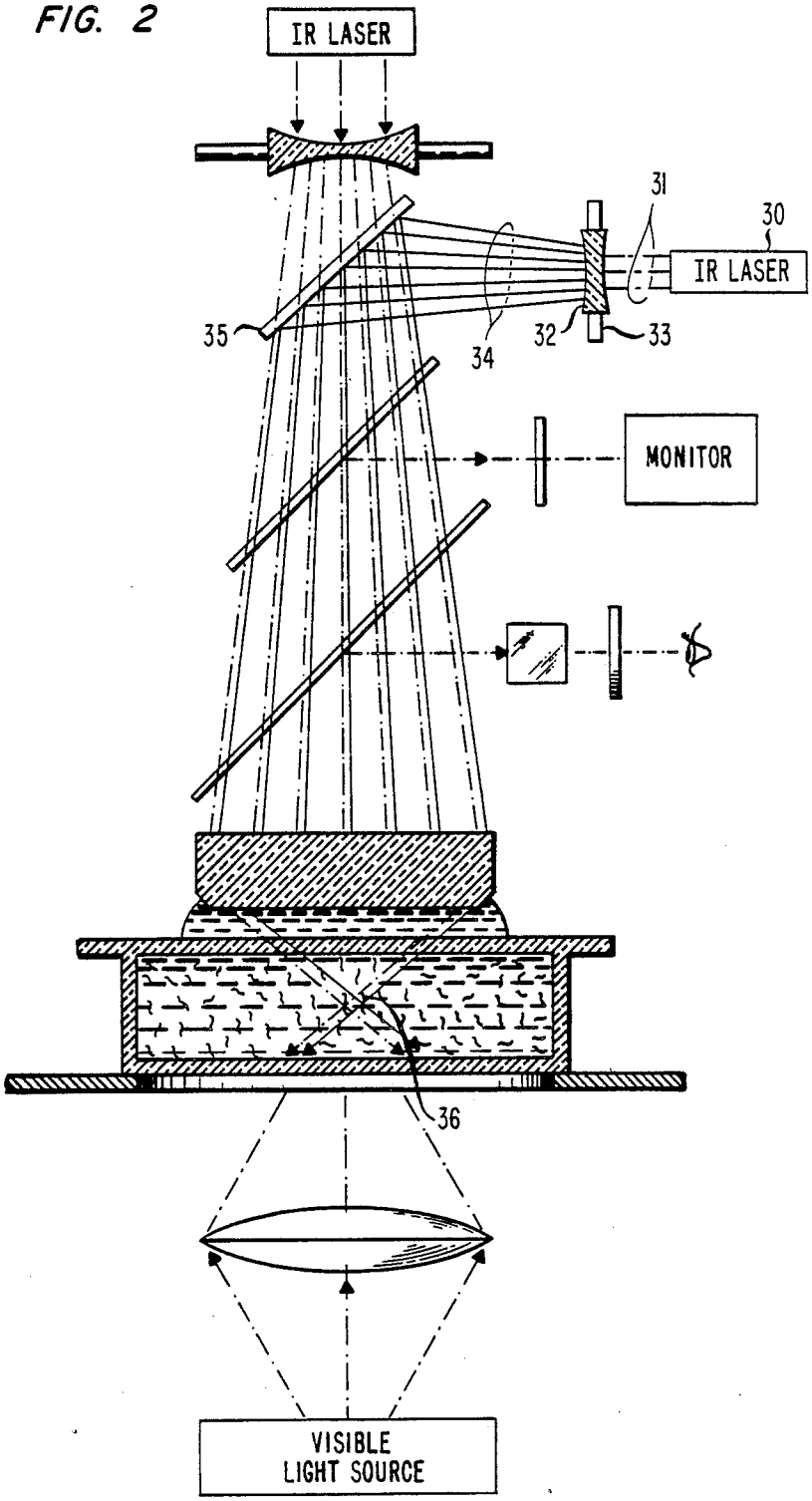
IR LASER
31
30
IR LASER
35
34
32
33
MONITOR
36
VISIBLE
LIGHT SOURCE