FIELD-EFFECT TRANSISTOR MEMORY

Filed July 14, 1967 3 Sheets-Sheet 1

FIG. 1

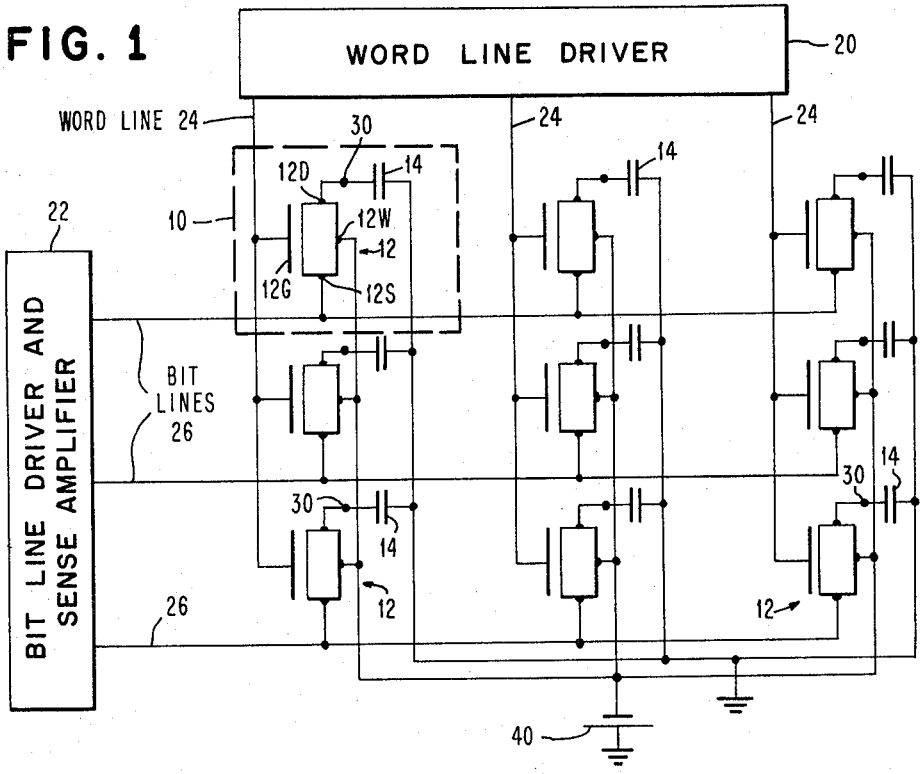

FIG. 2

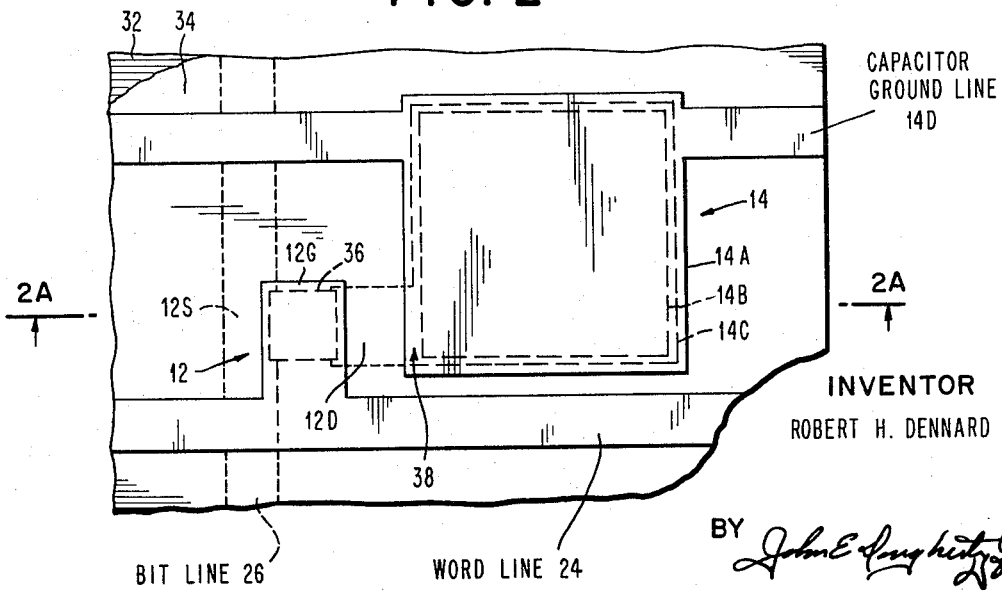

INVENTOR
ROBERT H. DENNARD

BY John E. Coughlin Jr.
ATTORNEY