US006882086B2

(12) **United States Patent**
Kornbluh et al.

(10) **Patent No.: US 6,882,086 B2**
(45) **Date of Patent: Apr. 19, 2005**

(54) **VARIABLE STIFFNESS ELECTROACTIVE POLYMER SYSTEMS**

(75) Inventors: **Roy D. Kornbluh**, Palo Alto, CA (US); **Ronald E. Pelrine**, Boulder, CO (US)

(73) Assignee: **SRI International**, Menlo Park, CA (US)

(*) Notice: Subject to any disclaimer, the term of this patent is extended or adjusted under 35 U.S.C. 154(b) by 183 days.

(21) Appl. No.: **10/053,511**

(22) Filed: **Jan. 16, 2002**

(65) **Prior Publication Data**

US 2002/0175594 A1 Nov. 28, 2002

Related U.S. Application Data

(60) Provisional application No. 60/293,005, filed on May 22, 2001, now abandoned, and provisional application No. 60/327,846, filed on Oct. 5, 2001, now abandoned.

(51) **Int. Cl.**[7] **H01L 41/08**
(52) **U.S. Cl.** **310/328**; 310/330; 310/800
(58) **Field of Search** 310/311, 316.01, 310/317, 319, 328–332, 800

(56) **References Cited**

U.S. PATENT DOCUMENTS

4,158,787 A * 6/1979 Forward 310/51
4,626,730 A * 12/1986 Hubbard, Jr. 310/326
4,849,668 A * 7/1989 Crawley et al. 310/328
4,868,447 A * 9/1989 Lee et al. 310/328
4,885,783 A 12/1989 Whitehead et al.
4,980,597 A * 12/1990 Iwao 310/319
5,424,596 A * 6/1995 Mendenhall et al. 310/328
5,857,694 A * 1/1999 Lazarus et al. 280/602
5,977,685 A 11/1999 Kurita et al.
6,048,276 A * 4/2000 Vandergrift 473/316
6,060,811 A 5/2000 Fox et al.
6,196,935 B1 * 3/2001 Spangler et al. 473/318
6,198,204 B1 * 3/2001 Pottenger 310/326
6,249,076 B1 6/2001 Madden et al.
6,252,334 B1 * 6/2001 Nye et al. 310/328
6,486,589 B1 * 11/2002 Dujari et al. 310/331

OTHER PUBLICATIONS

Roy D. Kornbluh, Robotic Systems, Ocean Engineering and Marine Systems, 2000 Program, Jan. 2001, Office of Naval Research Public Release, ONR–32100–1.
Roy D. Kornbluh, Robotic Systems, Ocean Engineering and Marine Systems, 1999 Program, Feb. 2000, Office of Naval Research Public Release, ONR 32100–2.
Roy D. Kornbluh, Robotic Systems, Ocean Engineering and Marine Systems, 1998 Program, Feb. 1999 Office of Naval Research Public Release, ONR 32199–4.
Roy D. Kornbluh, Robotic Systems, Ocean Engineering and Marine Systems 1997 Program , Dec. 1997, Office of Naval Research Public Release, ONR 32198–2.
Ashley, S., "Smart Skis and Other Adaptive Structures", *Mechanical Engineering*, Nov. 1995, pp. 77–81.

(Continued)

Primary Examiner—Mark Budd
(74) *Attorney, Agent, or Firm*—Beyer Weaver & Thomas LLP

(57) **ABSTRACT**

The invention relates to systems that provide variable stiffness and/or variable damping using an electroactive polymer transducer. Systems described herein offer several techniques that provide variable and controlled stiffness and/or damping. A transducer may be implemented using open loop control, thereby providing simple systems that inactively deliver a desired stiffness and/or damping performance. Alternately, closed loop control techniques permit electroactive polymer transducer designs that actively adapt the stiffness and/or damping performance of a system. Further, transducers may be implemented in a device whose stiffness changes with deflection of the polymer.
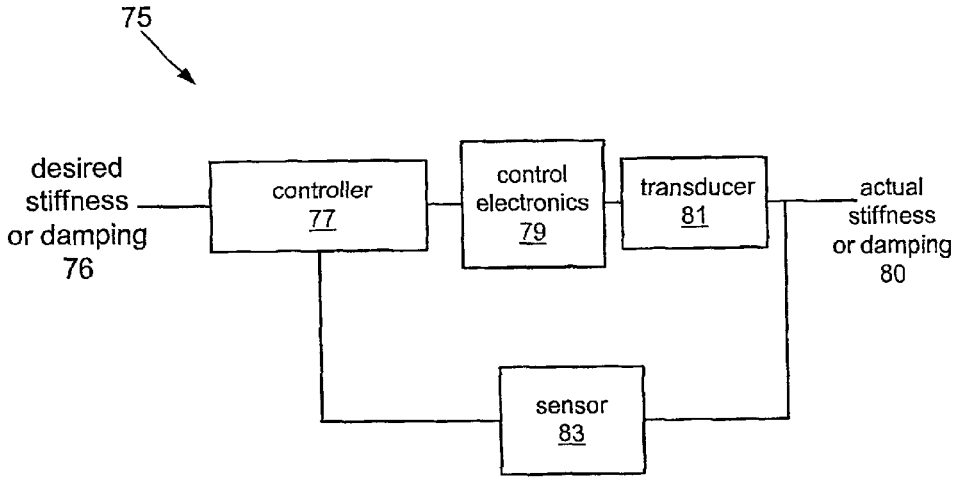
96 Claims, 9 Drawing Sheets