US005378286A

United States Patent [19]

Chiou et al.

[11] Patent Number: 5,378,286

[45] Date of Patent: Jan. 3, 1995

[54] **METHOD OF PREPARING REDUCED FAT FOODS**

[75] Inventors: **Ruth G. Chiou; Cheryl C. Brown; Jeanette A. Little; Austin H. Young; Robert V. Schanefelt; Donald W. Harris; Keith D. Stanley; Helen D. Coontz; Carolyn J. Hamdan,** all of Decatur; **Jody A. Wolf-Rueff,** Clinton, all of Ill.; **Lori A. Slowinski,** Madison, Wis.; **Kent R. Anderson,** Warrensburg, Ill.; **William F. Lehnhardt,** Decatur, Ill.; **Zbigniew J. Witczak,** Decatur, Ill.

[73] Assignee: **A. E. Staley Manufacturing Co.,** Decatur, Ill.

[21] Appl. No.: **857,532**

[22] Filed: **Apr. 21, 1992**

Related U.S. Application Data

[60] Division of Ser. No. 578,994, Sep. 6, 1990, abandoned, which is a continuation-in-part of Ser. No. 483,208, Feb. 20, 1990, abandoned.

[51] **Int. Cl.**[6] **C13K 1/06;** C08B 30/00

[52] **U.S. Cl.** **127/36;** 127/38; 127/40; 127/69; 127/70; 127/71; 127/1

[58] **Field of Search** 127/36, 38, 40, 69, 127/70, 71, 1

[56] **References Cited**

U.S. PATENT DOCUMENTS

675,822	6/1901	Duryea	127/33
696,949	4/1902	Duryea	127/33
1,668,308	5/1928	Ebert et al.	127/40
1,692,817	11/1928	Christman	127/40
2,068,051	1/1937	Canton	426/578
2,131,064	9/1938	Musher	426/633
2,503,053	4/1950	Kerr	127/38
2,791,508	5/1957	Rivoche	426/573
2,805,995	9/1957	Adelson	252/33.6
2,978,446	4/1961	Battista	260/212
2,989,425	6/1961	Bierke et al.	127/36
3,023,104	2/1962	Battista	99/1
3,067,067	12/1962	Etheridge	127/71
3,093,486	6/1963	Krett	99/144
3,133,836	5/1964	Winfrey	127/71
3,197,337	7/1965	Schink	127/28
3,219,483	11/1965	Goos	127/28
3,351,489	11/1967	Battista	127/32
3,532,602	10/1970	Seidman	195/31
3,556,942	1/1971	Hathaway	195/31

(List continued on next page.)

FOREIGN PATENT DOCUMENTS

1016006	8/1977	Canada	99/1
0052899	2/1982	European Pat. Off.	A23D 3/00
0237120	9/1987	European Pat. Off.	A23D 3/00
0298561	1/1989	European Pat. Off.	A23L 1/307
0327120	8/1989	European Pat. Off.	A23D 5/00
0327288	8/1989	European Pat. Off.	A23D 3/00

(List continued on next page.)

OTHER PUBLICATIONS

J. Jane et al., "Preparation and Properties of Small-Particle Corn Starch", *Cereal Chemistry,* vol. 69, pp. 280–283 (1992).

Tegge, "Produkte der sauren Stärkehydrolyse", Die Stärken, pp. 244–246 (1981). (English translation).

"Avicel RC in canned foods", bulletin No. RC-31, FMC Corp. (May 1972).

(List continued on next page.)

Primary Examiner—Paul Lieberman

Attorney, Agent, or Firm—Arnold, White & Durkee

[57] **ABSTRACT**

A food formulation having a reduced level of fat and/or oil is provided. The food formulation is a mixture of a foodstuff and a fragmented, amylopectin starch hydrolysate as a replacement for at least a substantial portion of the fat and/or oil of said food formulation. The fragmented starch hydrolysate is capable of forming an aqueous dispersion at about 20% hydrolysate solids exhibiting a yield stress of from about 100 to about 1,500 pascals. Also provided is a method of formulating a food containing a fat and/or oil ingredient comprising replacing at least a portion of said fat and/or oil ingredient with the fragmented, amylopectin starch hydrolysate. Examples of food formulations include those for margarine, salad dressings (pourable and spoonable), frostings, and frozen novelties.
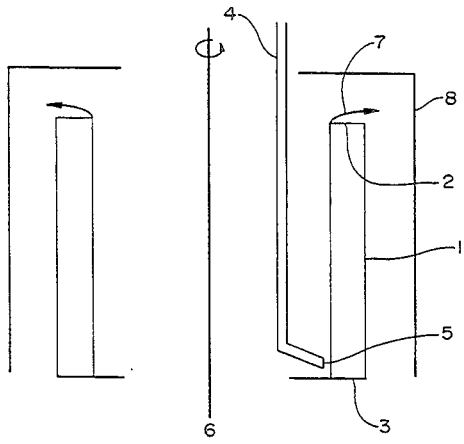
27 Claims, 4 Drawing Sheets