US009165986B2

(12) **United States Patent**
Lin

(10) **Patent No.: US 9,165,986 B2**
(45) **Date of Patent: Oct. 20, 2015**

(54) **ORGANIC LIGHT EMITTING DIODE PACKAGE AND METHOD FOR MANUFACTURING THE SAME**

(71) Applicant: **Ye Xin Technology Consulting Co., Ltd.**, Hsinchu (TW)

(72) Inventor: **Pen-Chu Lin**, Hsinchu (TW)

(73) Assignee: **Ye Xin Technology Consulting Co., Ltd.**, Hsinchu (TW)

(*) Notice: Subject to any disclaimer, the term of this patent is extended or adjusted under 35 U.S.C. 154(b) by 0 days.

(21) Appl. No.: **14/144,598**

(22) Filed: **Dec. 31, 2013**

(65) **Prior Publication Data**

US 2015/0053932 A1 Feb. 26, 2015

(30) **Foreign Application Priority Data**

Aug. 23, 2013 (TW) ..... 102130198 A

(51) **Int. Cl.**
H01L 27/32 (2006.01)
H01L 51/56 (2006.01)
H01L 51/52 (2006.01)

(52) **U.S. Cl.**
CPC ***H01L 27/3244*** (2013.01); ***H01L 51/5237*** (2013.01); ***H01L 51/56*** (2013.01)

(58) **Field of Classification Search**
CPC H01J 1/62
USPC 257/40, 99, 787, 794; 438/34
See application file for complete search history.

(56) **References Cited**

U.S. PATENT DOCUMENTS

5,757,126	A *	5/1998	Harvey et al.	313/506
7,541,671	B2 *	6/2009	Foust et al.	257/688
8,637,883	B2 *	1/2014	Chakraborty	257/98
2004/0145310	A1 *	7/2004	Su et al.	313/512
2013/0161592	A1 *	6/2013	Lee et al.	257/40
2014/0117333	A1 *	5/2014	Lee et al.	257/40

OTHER PUBLICATIONS

Nicola Pinna et al. Atomic layer deposition of nanostructured materials/Chapter 17, publisher Weinheim: 2012.*

* cited by examiner

Primary Examiner — Yu-Hsi D Sun
Assistant Examiner — Chi-Hua Yang
(74) *Attorney, Agent, or Firm* — Novak Druce Connolly Bove + Quigg LLP

(57) **ABSTRACT**

An organic light emitting diode (OLED) package includes a substrate, an OLED die mounted on the substrate and an encapsulation layer encapsulating the OLED die. The OLED package further includes a protecting layer formed on the OLED die. The encapsulation layer has a multi-layered structure and is deposited on the protecting layer. Refractive indexes of a cathode of the OLED die, the protecting layer and the encapsulation layer are gradually decreased in the sequence. A barrier layer for blocking moisture from entering the OLED package is formed on a bottom surface of the substrate by atomic layer deposition (ALD) method. The present disclosure also provides a method for manufacturing the OLED package.
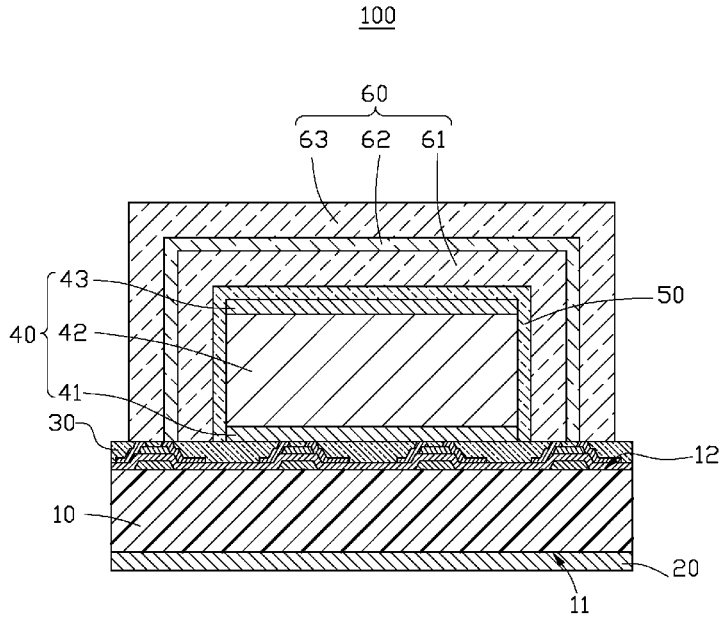
16 Claims, 3 Drawing Sheets