Dec. 8, 1936. E. B. G. LEFEVRE 2,063,686

CONCEALED HINGE
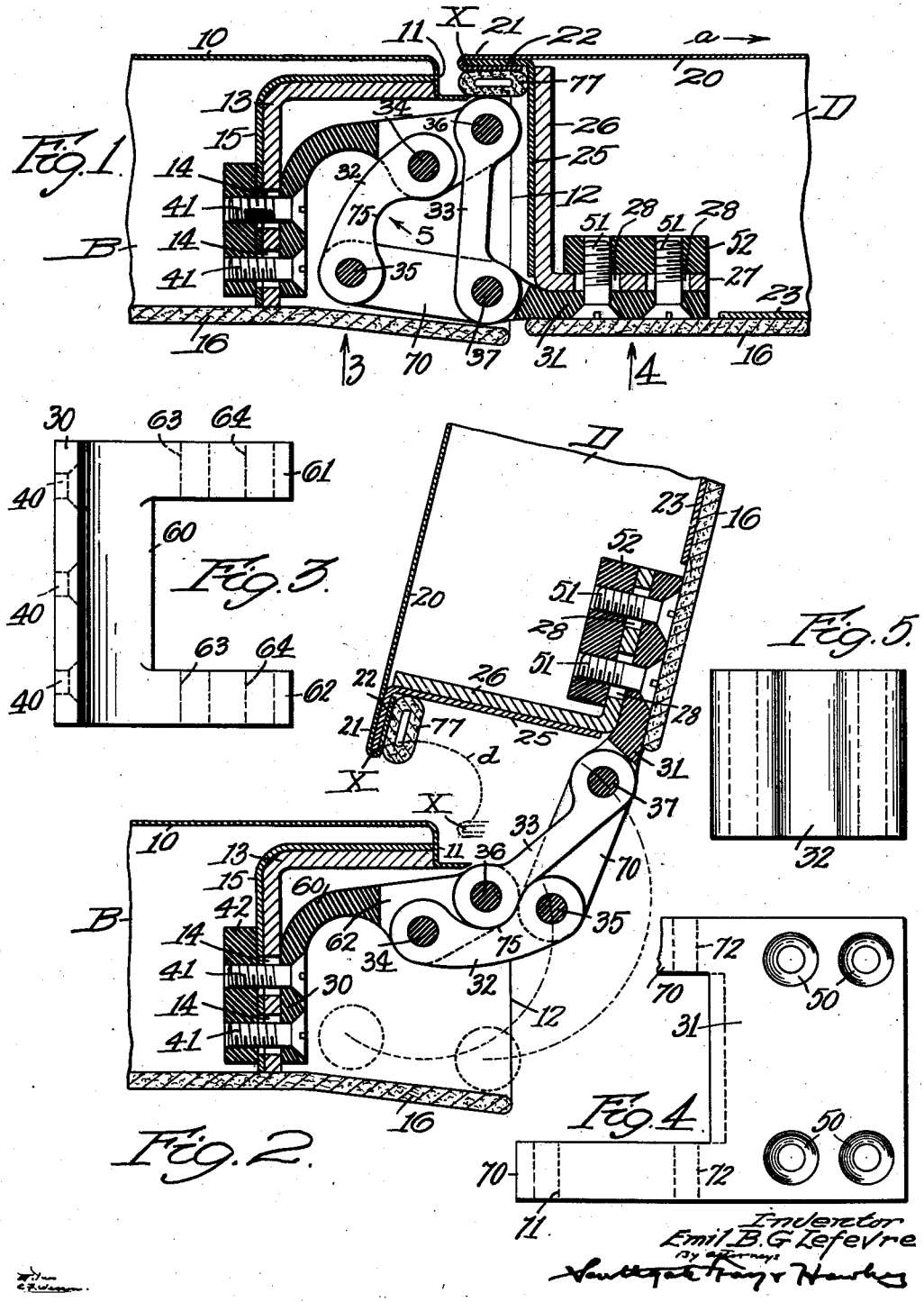
Filed March 6, 1935