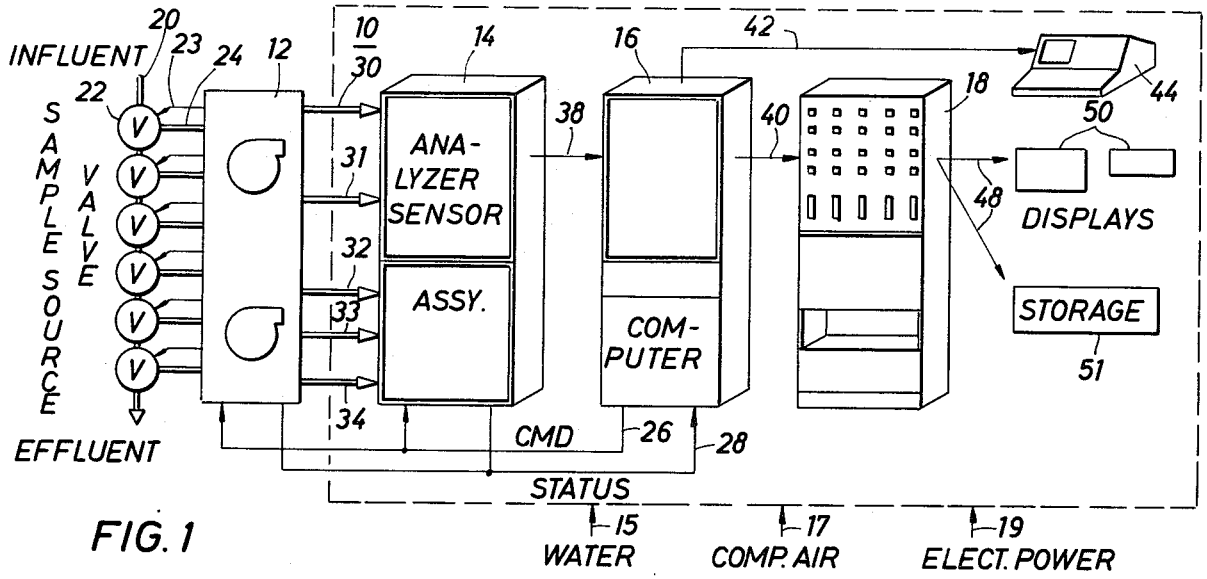
INFLUENT
SAMPLE SOURCE
VALVE
EFFLUENT
ANA-LYZER SENSOR
ASSY.
COM-PUTER
DISPLAYS
STORAGE
CMD
STATUS
WATER
COMP. AIR
ELECT. POWER

FIG. 1

FIG. 2

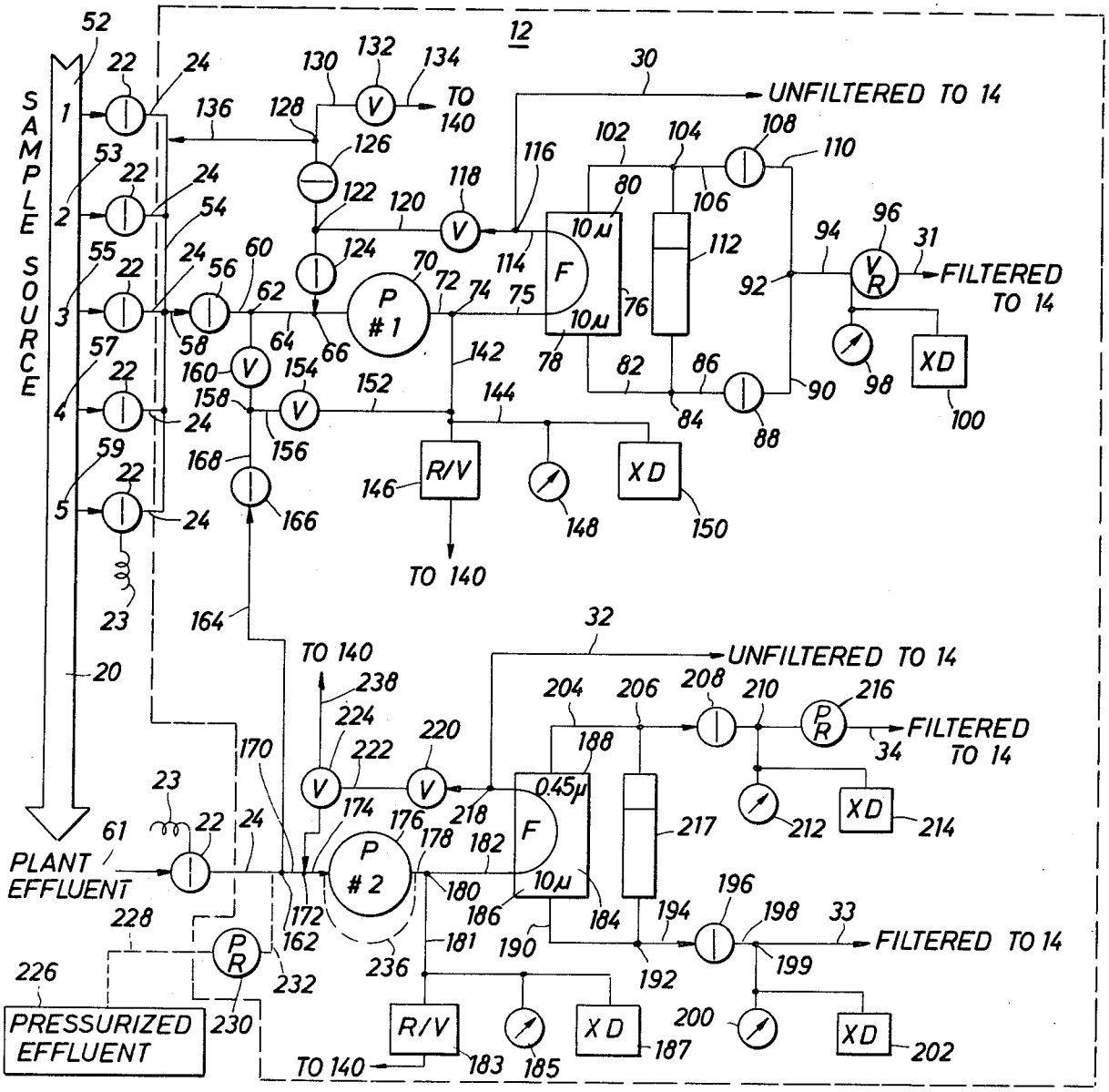
SAMPLE SOURCE
UNFILTERED TO 14
FILTERED TO 14
TO 140
PLANT EFFLUENT
PRESSURIZED EFFLUENT
P #1
P #2
R/V
XD