244-89 SR
FIP8301 OR 2,137,486
Search Room

[redacted]

Nov. 22, 1938. H. L. GRIMES 2,137,486
AIRPLANE
Filed Aug. 22, 1936 3 Sheets-Sheet 1

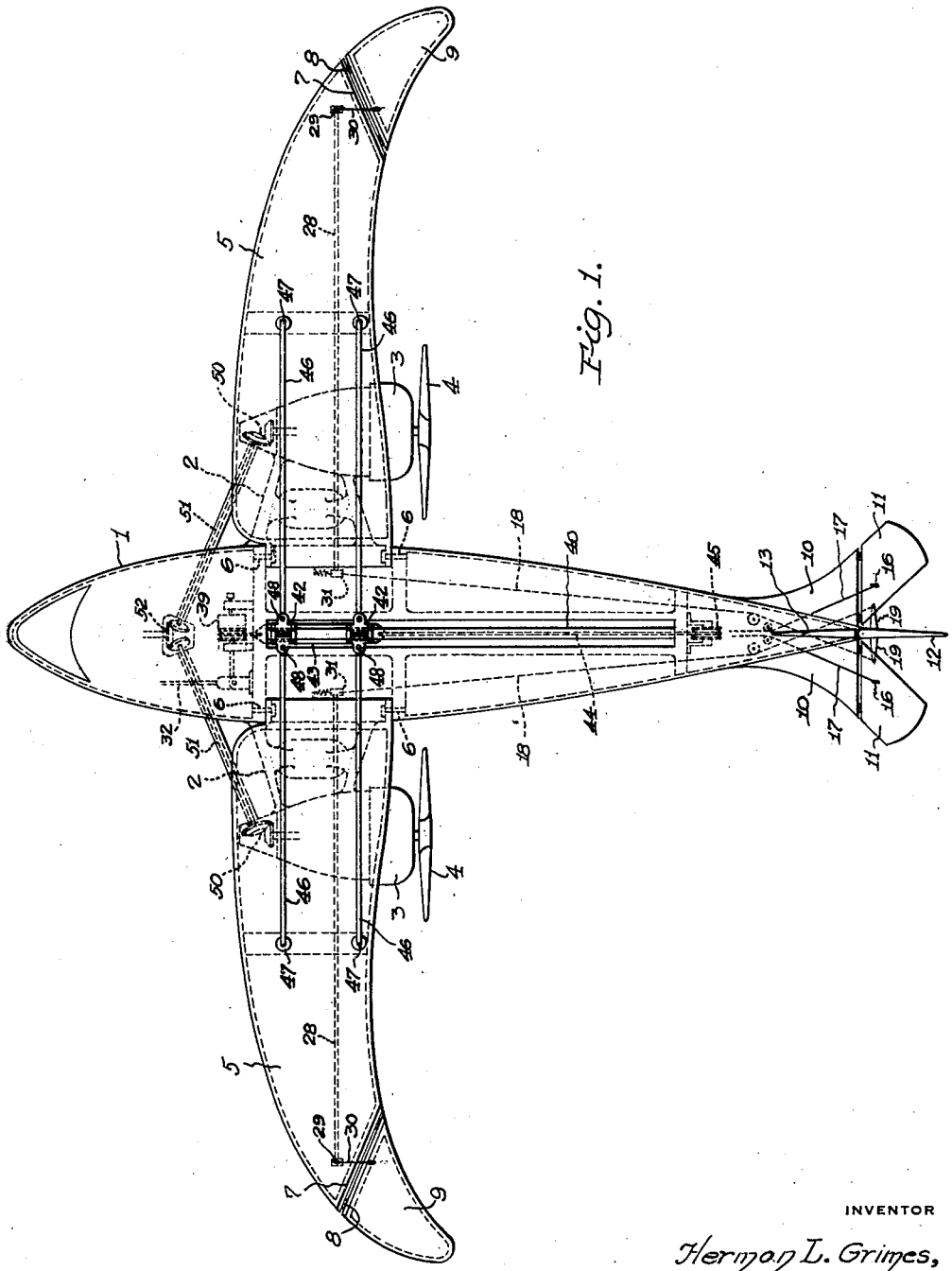

Fig. 1.

INVENTOR
Herman L. Grimes,
BY
ATTORNEYS