US009636786B2

(12) **United States Patent**
Tsui

(10) **Patent No.: US 9,636,786 B2**
(45) **Date of Patent: May 2, 2017**

(54) **LOCATOR BUSHING MECHANISM FOR MODULAR WELDING TABLES**

(71) Applicant: **Gary Tsui**, San Marino, CA (US)

(72) Inventor: **Gary Tsui**, San Marino, CA (US)

(*) Notice: Subject to any disclaimer, the term of this patent is extended or adjusted under 35 U.S.C. 154(b) by 0 days.

(21) Appl. No.: **14/867,813**

(22) Filed: **Sep. 28, 2015**

(65) **Prior Publication Data**

US 2017/0087673 A1 Mar. 30, 2017

(51) **Int. Cl.**
F16B 35/02 (2006.01)
B23K 37/04 (2006.01)
F16B 5/02 (2006.01)

(52) **U.S. Cl.**
CPC ***B23K 37/0461*** (2013.01); ***F16B 5/0208*** (2013.01); ***F16B 5/0225*** (2013.01)

(58) **Field of Classification Search**
CPC F16B 5/0208; F16B 5/0216; F16B 5/0225; F16B 5/0283; F16B 35/02; F16B 34/145; B23K 37/0461
USPC 411/353, 383, 384, 386, 517, 546; 16/2.1
See application file for complete search history.

(56) **References Cited**

U.S. PATENT DOCUMENTS

2,700,172 A * 1/1955 Rohe F16B 5/01 16/2.1
3,037,542 A * 6/1962 Boyd F16B 5/0208 411/105
3,041,913 A * 7/1962 Liska F16B 5/0208 285/148.27
3,455,362 A * 7/1969 Mohrman F16B 4/004 411/103
3,540,128 A * 11/1970 Giles B23Q 3/103 269/302
3,977,146 A * 8/1976 Wiley F16B 5/01 16/2.1
4,310,963 A * 1/1982 Blumle B23Q 3/103 156/305
4,878,795 A * 11/1989 Woodrow F16B 5/01 411/183
5,362,036 A * 11/1994 Whiteman B23K 37/0461 269/303
5,802,780 A * 9/1998 Hammerschlag A47B 47/00 403/200
6,264,412 B1 * 7/2001 Nakamura F16B 5/01 411/107
7,891,927 B2 * 2/2011 Burger F16B 5/0233 411/383
8,065,967 B2 * 11/2011 Wong B23K 37/0461 108/155
8,171,690 B2 * 5/2012 Ghatikar E04F 13/0837 403/267
9,578,959 B2 * 2/2017 Isgr A47B 13/088
2008/0047095 A1 * 2/2008 Weiss F16C 11/045 16/2.1

* cited by examiner

Primary Examiner — Roberta Delisle
(74) *Attorney, Agent, or Firm* — Jen-Feng Lee, Esq.

(57) **ABSTRACT**

The present invention will improve the efficiency of setting up a modular welding table by reducing the time it takes to properly aligning the plates on top of the frames, thanks to the design features of a tapered flange and a cylindrical protrusion as described and disclosed herein. Another advantage of implementing the design disclosed herein is that the plates can have double its useful life, if one side's surface get worn out, the plates can be flipped over and use the other side's surface.
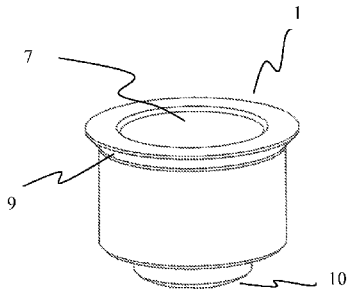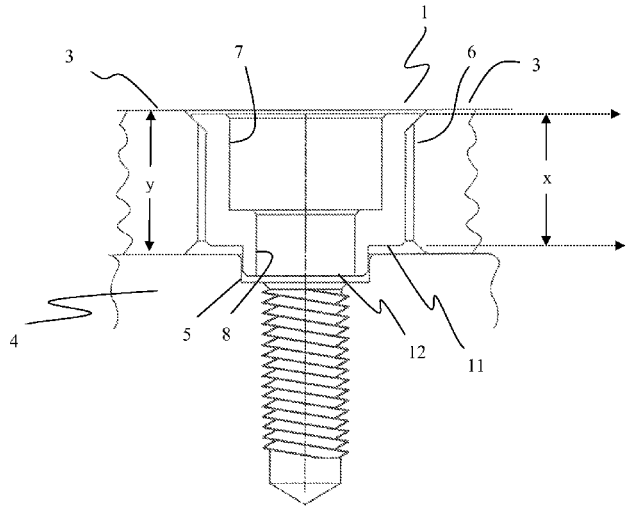
3 Claims, 7 Drawing Sheets