March 11, 1941. C. T. WALTER 2,234,686

NEEDLE AND CLAMP THEREFOR

Filed Jan. 2, 1940

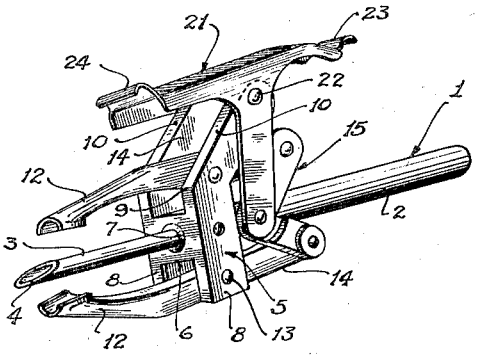

Fig. 1

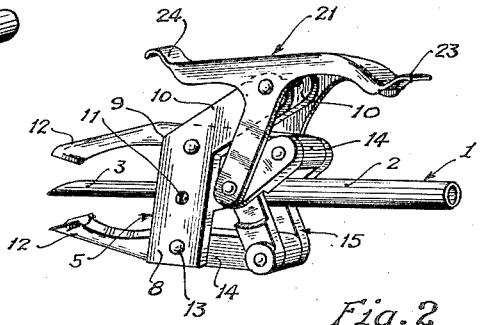

Fig. 2

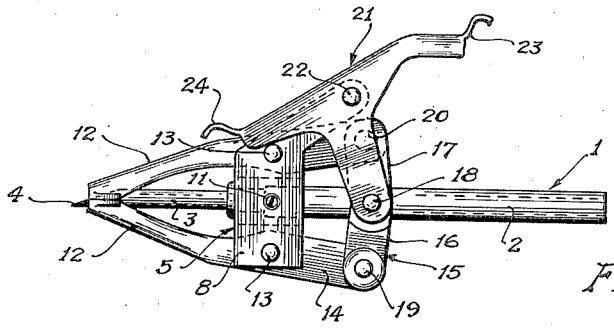

Fig. 3

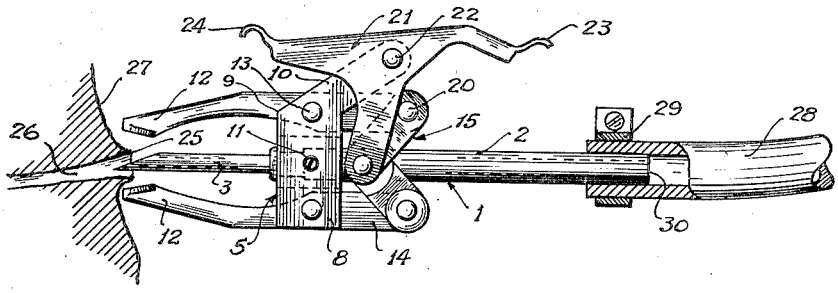

Fig. 4

Charles T. Walter

INVENTOR

BY Herbert E. Birch

ATTORNEY

ATTEST -

Wm C. Meiser