April 29, 1958 E. A. LOUDER ET AL 2,832,686

INSTANTLY SOLUBLE MILK POWDER AND PROCESS FOR MAKING SAME

Filed Sept. 7, 1954 2 Sheets-Sheet 1

FIG.1.

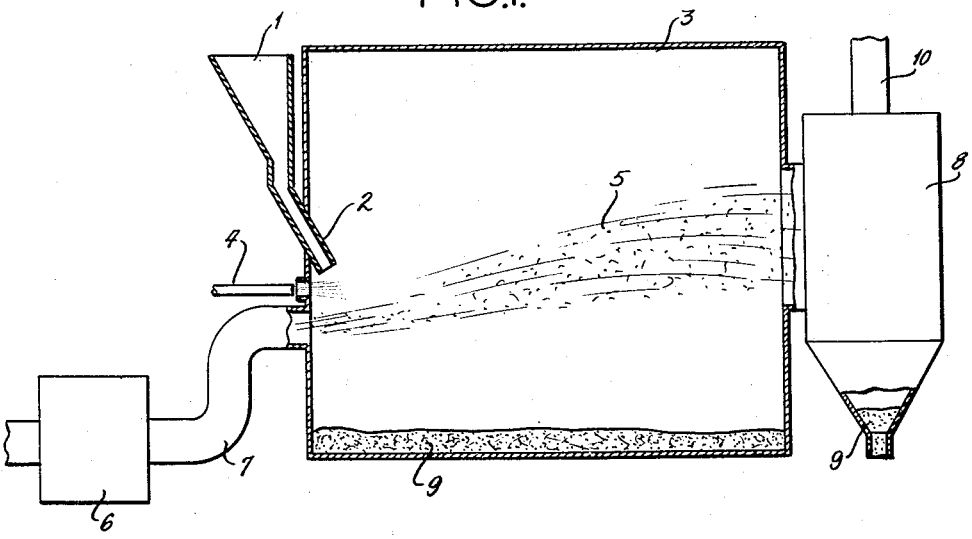

FIG.2.

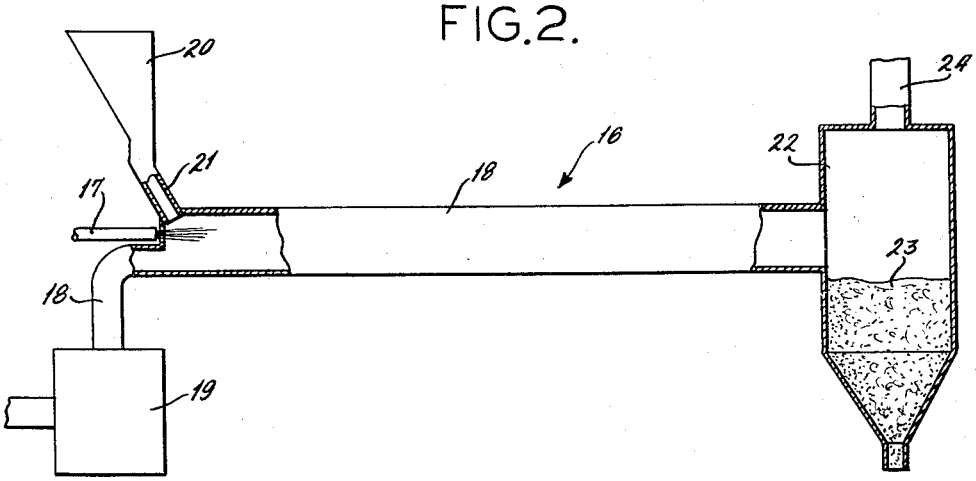

INVENTORS:
EARL A. LOUDER
ADRIAN Z. HODSON

By Gravely, Lieder, Woodruff & Wille
ATTORNEYS.