US007331886B2

(12) **United States Patent**
Morris et al.

(10) **Patent No.: US 7,331,886 B2**
(45) **Date of Patent: Feb. 19, 2008**

(54) **SLIDING ARROW STABILIZER**

(75) Inventors: **Paul Morris**, Tucson, AZ (US); **Larry Peterson**, Patagonia, AZ (US)

(73) Assignee: **Desert Dynamic Research, Inc.**, Tucson, AZ (US)

(*) Notice: Subject to any disclaimer, the term of this patent is extended or adjusted under 35 U.S.C. 154(b) by 569 days.

(21) Appl. No.: **10/227,002**

(22) Filed: **Aug. 23, 2002**

(65) **Prior Publication Data**

US 2003/0045381 A1 Mar. 6, 2003

Related U.S. Application Data

(60) Provisional application No. 60/315,165, filed on Aug. 28, 2001.

(51) **Int. Cl.**
F42B 6/04 (2006.01)

(52) **U.S. Cl.** **473/578**

(58) **Field of Classification Search** 473/578, 473/582, 583, 585, 586; 416/195
See application file for complete search history.

(56) **References Cited**

U.S. PATENT DOCUMENTS

1,424,672	A *	8/1922	Ogrissek	416/193 R
3,746,334	A	7/1973	Stubblefield	272/59
3,815,916	A	6/1974	Meszaros	273/106.5
3,903,639	A *	9/1975	Howell	446/57
3,946,519	A	3/1976	Vadik et al.	46/79
4,182,513	A	1/1980	Henderson	273/106.5 C
4,204,307	A	5/1980	Pfetzing	29/407
4,589,778	A *	5/1986	Mitchell	366/316
4,905,397	A	3/1990	Juelg, Jr.	43/6
5,234,220	A *	8/1993	Schellhammer et al.	473/578
5,311,855	A	5/1994	Basik	124/44.5
5,439,231	A	8/1995	Roberts et al.	273/423
5,496,041	A	3/1996	Broussard	273/416
5,846,147	A	12/1998	Basik	473/586
5,863,250	A *	1/1999	Harris	463/34
5,951,419	A	9/1999	Cameneti	473/586
6,179,736	B1	1/2001	Thurber	473/578
6,454,623	B1	9/2002	Flatau	446/34
6,695,727	B1	2/2004	Kuhn	473/586

FOREIGN PATENT DOCUMENTS

GB	498823	1/1939
GB	620536	3/1949

* cited by examiner

Primary Examiner—John A. Ricci
(74) *Attorney, Agent, or Firm*—Hayes Soloway P.C

(57) **ABSTRACT**

An improved arrow and sliding stabilizer therefor are provided. The sliding stabilizer is used for stabilizing arrow flight, instead of fixed or glued tail feathers, vanes or other fletching. The invention improves current projectile technology with reduced assembly labor cost, the elimination of bow clearance issues, improved accuracy with the consistent production of the sliding stabilizer, easy replacement of the stabilizer in the field, and improved arrow storage. A sliding stabilizer is designed to slide along the shaft of an arrow and comprises an annular wing and a plurality of fins. In use, the stabilizer is positioned at the front of the arrow prior to launch, and the arrow slides quickly through the stabilizer until secured at a stop position at or near the trailing end of the arrow.
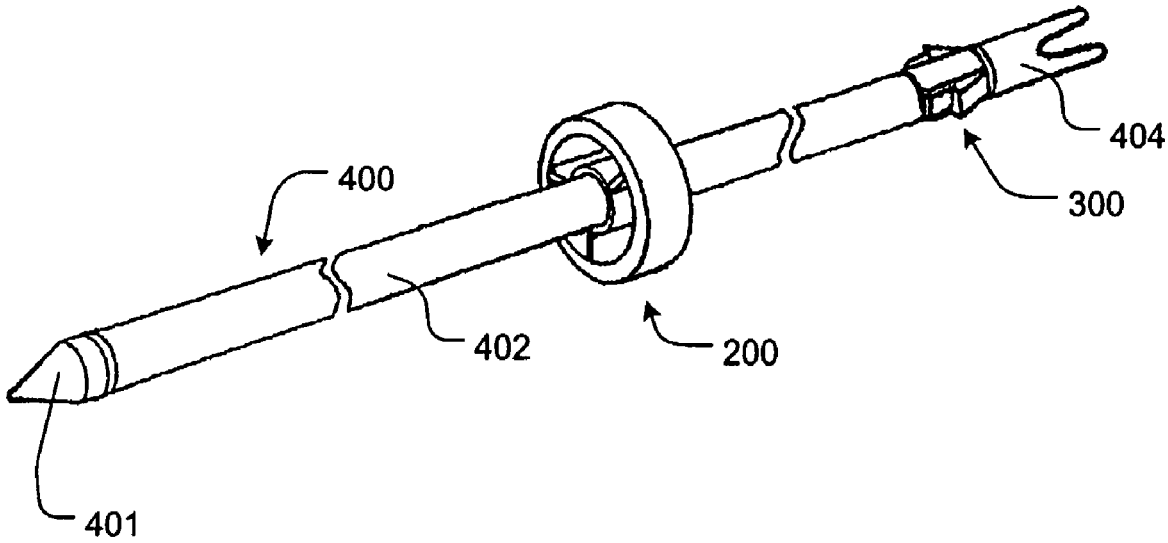
42 Claims, 4 Drawing Sheets