Aug. 15, 1950 W. C. MENDE 2,518,486

SINGLE DOSE DISPENSER

Filed March 6, 1948

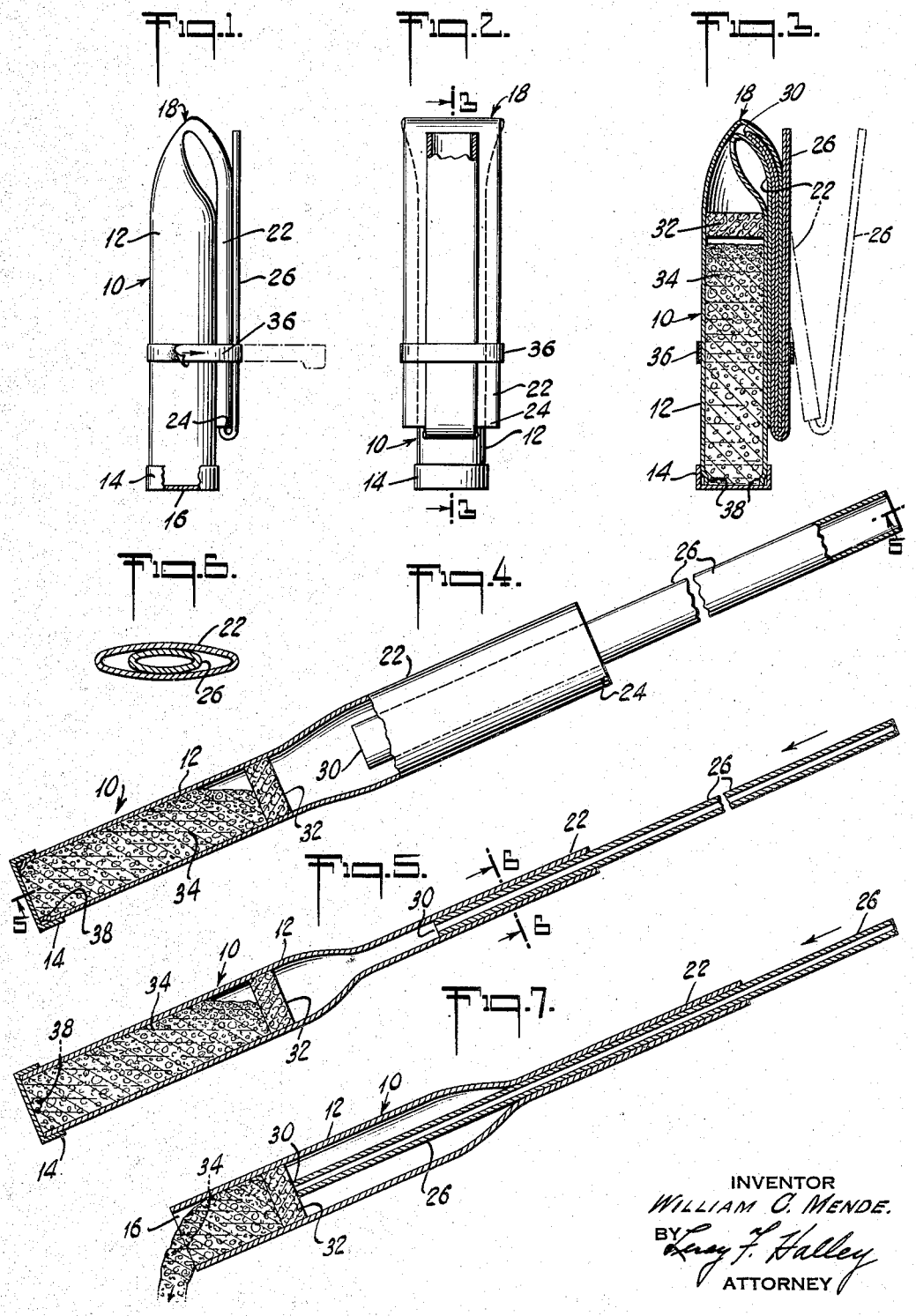

INVENTOR
WILLIAM C. MENDE.
BY Leroy F. Halley
ATTORNEY