Sept. 13, 1955 R. R. SEEBER, JR 2,717,686

WORD WRITING TYPEWRITER

Filed Nov. 5, 1952 11 Sheets-Sheet 1

FIG. 1

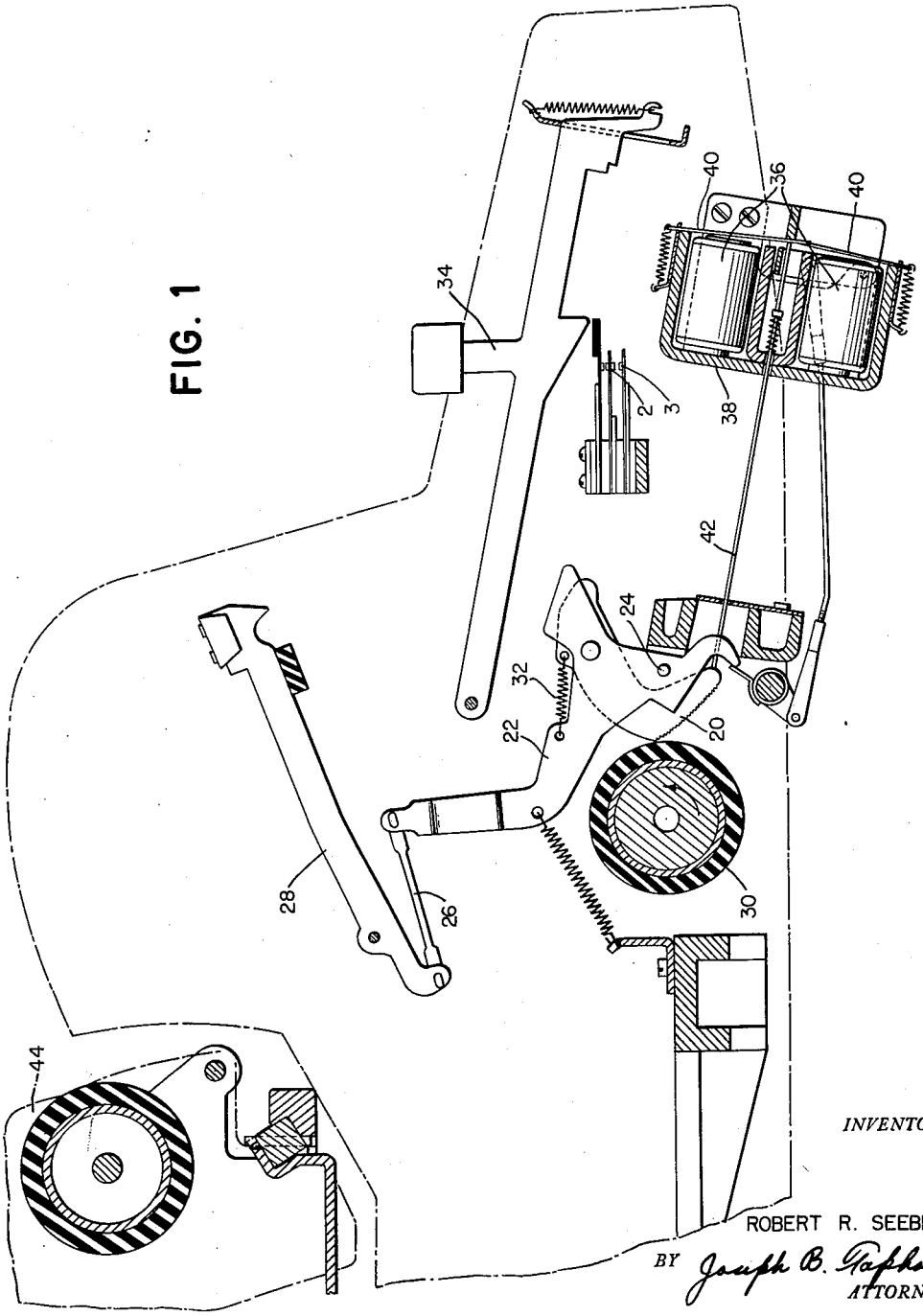

INVENTOR.

ROBERT R. SEEBER Jr.

BY Joseph B. Gaphson

ATTORNEY