United States Patent [19]

Hagar, III et al.

[11] **Patent Number: 4,914,686**

[45] **Date of Patent: Apr. 3, 1990**

[54] **CORDLESS PHONE DATA LOGGER**

[76] Inventors: **William G. Hagar, III,** 28 Winchester St., Newton Highlands, Mass. 02161; **Richard Volpicelli,** 236 Grove St., Lexington, Mass. 02173

[21] Appl. No.: **935,738**

[22] Filed: **Nov. 28, 1986**

[51] **Int. Cl.**[4] **H04Q 7/04**

[52] **U.S. Cl.** **379/61;** 379/58; 379/63

[58] **Field of Search** 379/61, 58, 59, 57, 379/56; 128/903

[56] **References Cited**

U.S. PATENT DOCUMENTS

3,449,750	6/1969	Sweigert	379/61
4,100,536	7/1978	Ball et al.	340/207 R
4,456,793	6/1984	Baker et al.	379/61
4,577,182	3/1986	Millsap et al.	340/539
4,593,273	6/1986	Narcisse	340/539
4,675,863	6/1987	Paneth et al.	370/50
4,688,244	8/1987	Hannon et al.	379/58
4,754,473	6/1988	Edwards	379/58
4,805,631	2/1989	Roi du Maroc, II	128/710

OTHER PUBLICATIONS

Formanek Article, Nov. 26, 1986.

Abstract by Barr and Hagar 126, Abstracts for the Eighth Biennial International Estuarine Research Conference.

Publication of Volpicelli, et al., Interactive Water Monitoring System Accessible by Cordless Telephone.

Primary Examiner—Robert Lev

Attorney, Agent, or Firm—Weingarten, Schurgin, Gagnebin & Hayes

[57] **ABSTRACT**

A remote data logging and telecommunication system utilizing a cordless telephone as a convenient two-way wireless link between a location of data collection and storage and a distant station. The distant station can command the data logging system to log, read or change logging protocols. Password and code word protection is available for the system.
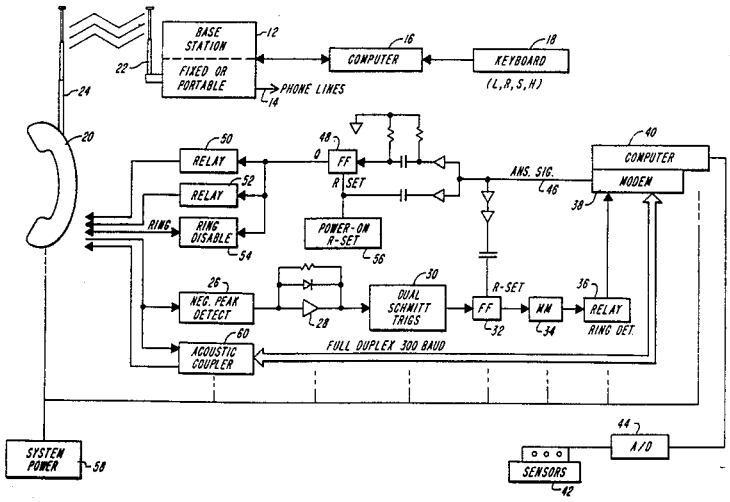
26 Claims, 3 Drawing Sheets