Jan. 14, 1947. N. BREWER 2,414,086

FLUID METER

Filed Nov. 25, 1943 3 Sheets-Sheet 2

Fig. 3.

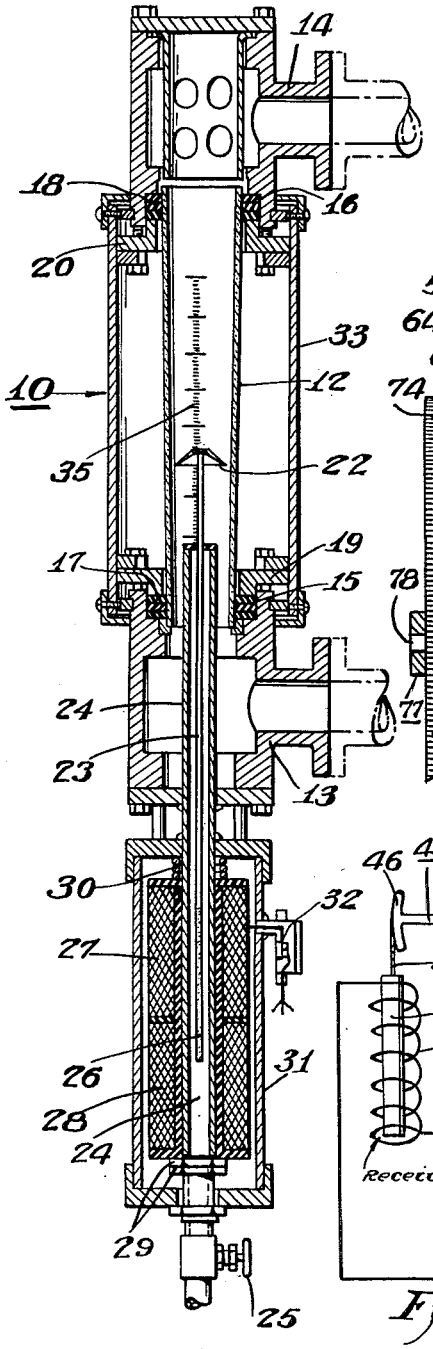

Fig. 2

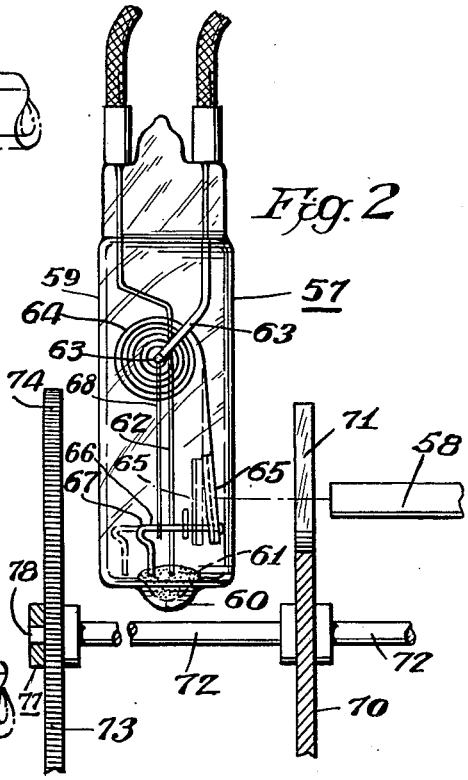

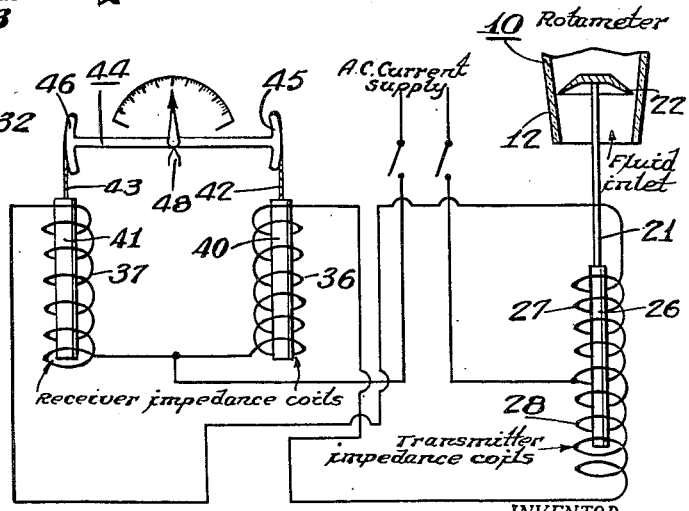

Fig. 5

INVENTOR.
Nathaniel Brewer
BY
Leonard L. Kalish
ATTORNEY