Jan. 14, 1947. N. BREWER 2,414,086

FLUID METER

Filed Nov. 25, 1943 3 Sheets-Sheet 1

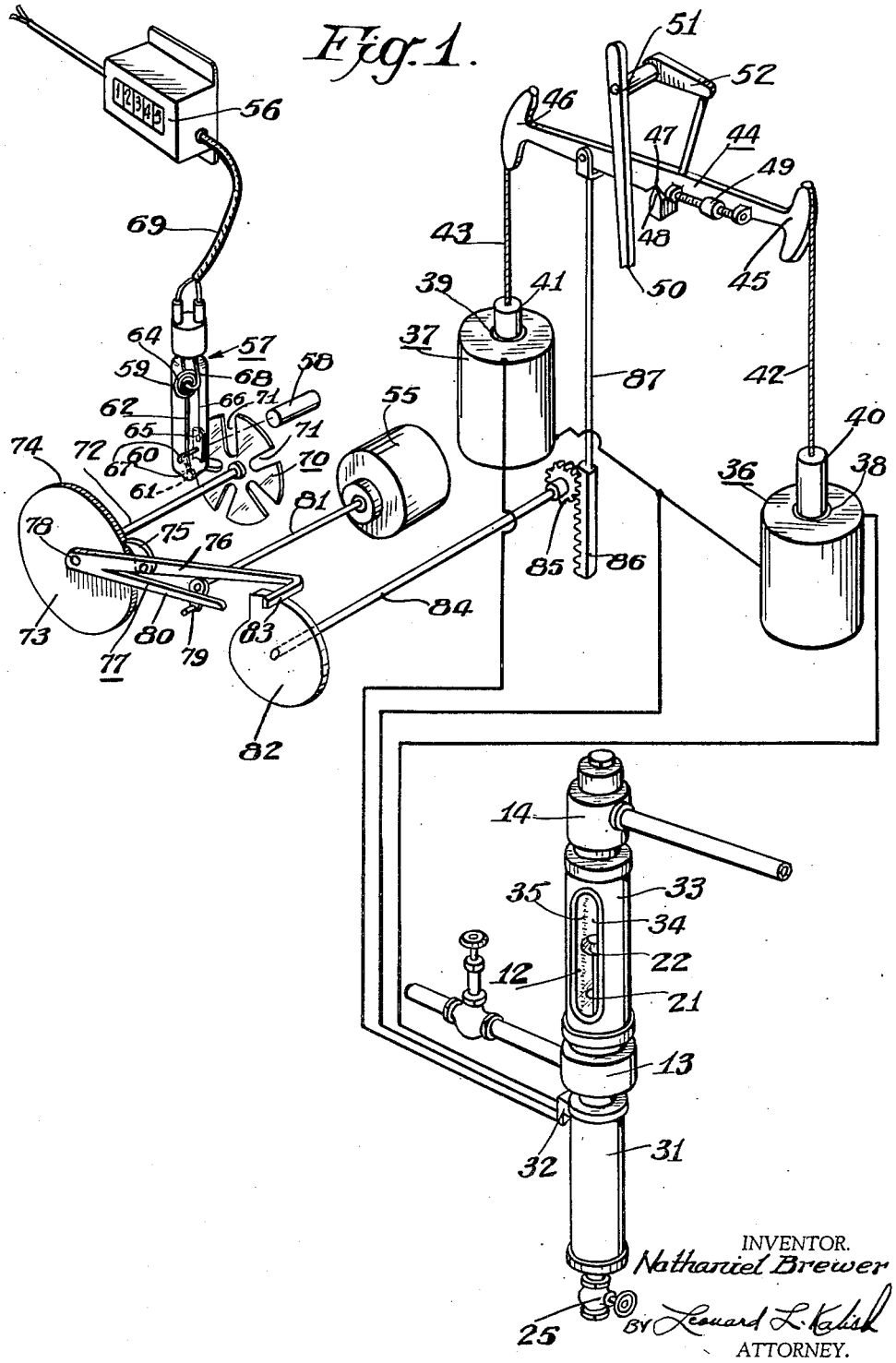

INVENTOR.
Nathaniel Brewer
BY Leonard L. Kalish
ATTORNEY.