United States Patent [19]

Howard et al.

[11] **Patent Number: 4,913,986**

[45] **Date of Patent: Apr. 3, 1990**

[54] **BATTERY FILL-POST SEAL ARRANGEMENT FOR HERMETICITY LEAKAGE TESTING**

[75] Inventors: **William G. Howard**, St. Paul; **David R. Berberick**, Maple Grove, both of Minn.

[73] Assignee: **Medtronic, Inc.**, Minneapolis, Minn.

[21] Appl. No.: **859,925**

[22] Filed: **May 5, 1986**

Related U.S. Application Data

[63] Continuation of Ser. No. 537,256, Sep. 28, 1983, abandoned.

[51] **Int. Cl.**[4] **H01M 10/48**

[52] **U.S. Cl.** **429/90**; 429/174; 429/185; 73/40.7; 73/52

[58] **Field of Search** 429/90, 185, 171, 174, 429/122, 121; 73/40.7, 49.3, 49.8, 52; 220/361, 365, 378; 277/2

[56] **References Cited**

U.S. PATENT DOCUMENTS

4,174,424	11/1979	Jurva et al.	429/90
4,565,093	1/1986	Jurva et al.	429/90 X
4,748,094	5/1988	Howard et al.	429/90

Primary Examiner—Anthony Skapars

Attorney, Agent, or Firm—Vidas & Arrett

[57] **ABSTRACT**

Double seal arrangement with intermediate test gas holding means for leak testing and assuring high hermetic batteries.
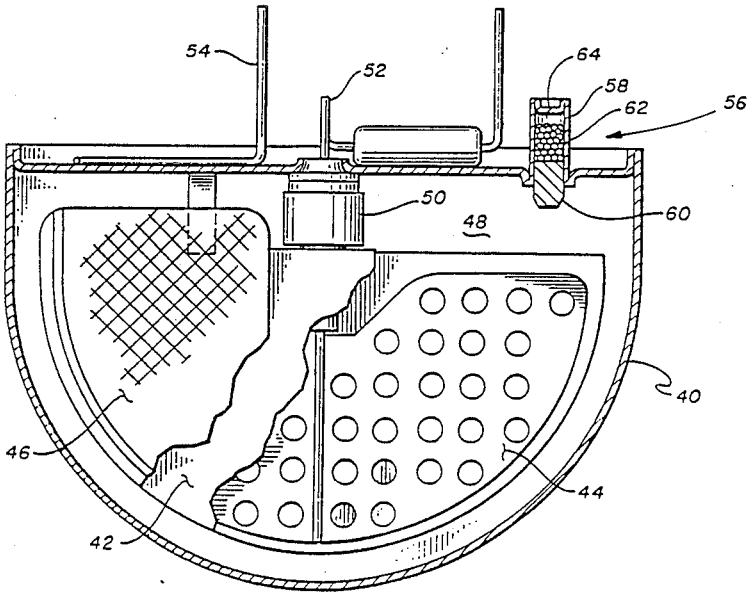
3 Claims, 1 Drawing Sheet