US009312086B2

(12) **United States Patent**
Kloss et al.

(10) **Patent No.: US 9,312,086 B2**
(45) **Date of Patent: Apr. 12, 2016**

(54) **PROXIMITY SWITCH WITH SNAP LOCK**

(75) Inventors: **Troy A. Kloss**, Leland, NC (US); **Douglas Coe**, Waxhaw, NC (US); **John William Petty**, Hope Mills, NC (US); **Cathleen Mary Clausen**, Wilmington, NC (US)

(73) Assignee: **Dynapar Corporation**, Gurnee, IL (US)

(*) Notice: Subject to any disclaimer, the term of this patent is extended or adjusted under 35 U.S.C. 154(b) by 353 days.

(21) Appl. No.: **13/880,161**

(22) PCT Filed: **Oct. 21, 2011**

(86) PCT No.: **PCT/US2011/057184**

§ 371 (c)(1),
(2), (4) Date: **Apr. 18, 2013**

(87) PCT Pub. No.: **WO2012/061031**

PCT Pub. Date: **May 10, 2012**

(65) **Prior Publication Data**

US 2013/0222087 A1 Aug. 29, 2013

Related U.S. Application Data

(60) Provisional application No. 61/406,350, filed on Oct. 25, 2010, provisional application No. 61/438,445, filed on Feb. 1, 2011.

(51) **Int. Cl.**
H01H 36/00 (2006.01)

(52) **U.S. Cl.**
CPC ***H01H 36/00*** (2013.01); ***H01H 36/0006*** (2013.01)

(58) **Field of Classification Search**
CPC H01H 36/00; H01H 36/0006; H01H 36/0013; H01H 2051/2218
USPC 335/205–207
See application file for complete search history.

(56) **References Cited**

U.S. PATENT DOCUMENTS

2,548,581	A *	4/1951	Bigelow	H01H 36/0073	200/252
3,105,551	A *	10/1963	Ehlert	E21B 41/00	166/63
3,109,908	A *	11/1963	Clason	H01H 35/34	166/DIG. 42
3,167,623	A *	1/1965	Kaleta	G01F 23/56	200/318
3,414,853	A *	12/1968	Motis	H01H 13/506	335/207
3,980,375	A	9/1976	LaMarche		
4,291,761	A *	9/1981	Watson	H01H 36/00	166/66
4,295,390	A	10/1981	Buchta		
4,336,518	A *	6/1982	Holce	H01H 36/004	335/151
4,788,517	A *	11/1988	Meister	H01H 36/00	200/61.62
5,609,278	A	3/1997	Fresco		
6,752,437	B1	6/2004	Bantle et al.		
2005/0077162	A1	4/2005	Mori		
2007/0184682	A1	8/2007	Gobron		
2008/0266035	A1	10/2008	Rohrig et al.		
2009/0242590	A1	10/2009	Saveliev et al.		

* cited by examiner

Primary Examiner — Mohamad Musleh
(74) *Attorney, Agent, or Firm* — Beusse, Wolter, Sanks & Maire, PLLC

(57) **ABSTRACT**

A proximity switch (**20**, **20**A) that snaps quickly and locks between first and second positions of movable electrical contacts (**32**). A magnet (**42**) moves a first shaft (**26**) toward a magnetic target (**62**) when the target is proximate a sensor end (**43**) of the switch housing (**22**). A spring (**44**) urges the first shaft (**26**) away from the sensor end. Movement of the first shaft causes a second spring (**64**) to urge a second shaft (**28**) in the direction of the first shaft. Next the second shaft is released (**52**) to move in the direction urged by the second spring. The switch may be adapted to a client cable pin configuration via an adapter plug (**80**) in the housing with a flexible interconnection circuit (**82**) folded in a chamber between the adapter plug and leads from fixed electrical contacts (**38**) of the switch.
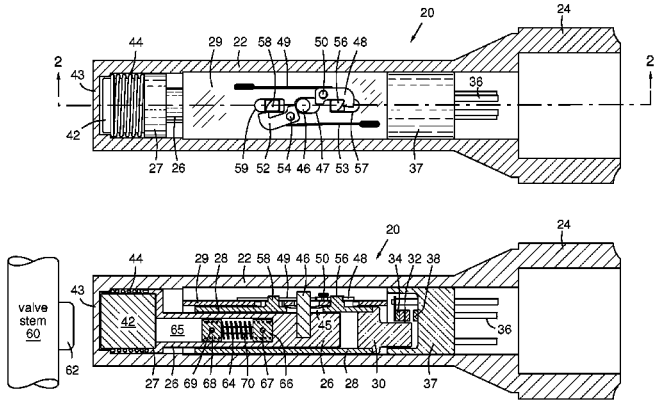
20 Claims, 5 Drawing Sheets