US009411386B2

(12) **United States Patent**
Sauerwein, Jr.

(10) **Patent No.: US 9,411,386 B2**
(45) **Date of Patent: Aug. 9, 2016**

(54) **MOBILE DEVICE WITH TAMPER DETECTION**

(75) Inventor: **James T. Sauerwein, Jr.**, Charlotte, NC (US)

(73) Assignee: **Hand Held Products, Inc.**, Fort Mill, SC (US)

(*) Notice: Subject to any disclaimer, the term of this patent is extended or adjusted under 35 U.S.C. 154(b) by 378 days.

(21) Appl. No.: **13/285,756**

(22) Filed: **Oct. 31, 2011**

(65) **Prior Publication Data**

US 2013/0111227 A1 May 2, 2013

(51) **Int. Cl.**
G06F 1/26 (2006.01)
G06F 21/00 (2013.01)

(52) **U.S. Cl.**
CPC . ***G06F 1/26*** (2013.01); ***G06F 21/00*** (2013.01)

(58) **Field of Classification Search**
CPC G01F 1/26; G01F 21/00
USPC 340/7.32; 455/127.1, 572–574, 455/343.1–343.6; 73/300–340; 713/300–340; 361/679.55
See application file for complete search history.

(56) **References Cited**

U.S. PATENT DOCUMENTS

5,107,286	A *	4/1992	Sergeant et al.	396/26
5,508,505	A *	4/1996	Walts et al.	235/462.46
6,109,528	A *	8/2000	Kunert et al.	235/472.01
6,621,039	B2 *	9/2003	Wang et al.	219/121.6
7,171,186	B2 *	1/2007	Miyachi et al.	455/343.5
7,571,468	B1 *	8/2009	Williams	G06F 21/34 713/184
8,310,604	B2 *	11/2012	Delmonico et al.	348/748
2008/0091605	A1 *	4/2008	Hughes	G06F 21/31 705/51
2008/0123262	A1	5/2008	Coleman et al.	
2008/0252084	A1 *	10/2008	Francis et al.	292/317
2009/0305397	A1 *	12/2009	Dodgson et al.	435/305.3
2011/0154077	A1 *	6/2011	Wasamoto et al.	713/322
2012/0077454	A1 *	3/2012	Paddon et al.	455/404.1

* cited by examiner

Primary Examiner — Jennifer Mehmood
Assistant Examiner — Omar Casillashernandez
(74) *Attorney, Agent, or Firm* — Additon, Higgins & Pendleton, P.A.

(57) **ABSTRACT**

Systems and methods for operating mobile devices having one or more environmental sensing systems for disrupting battery power.
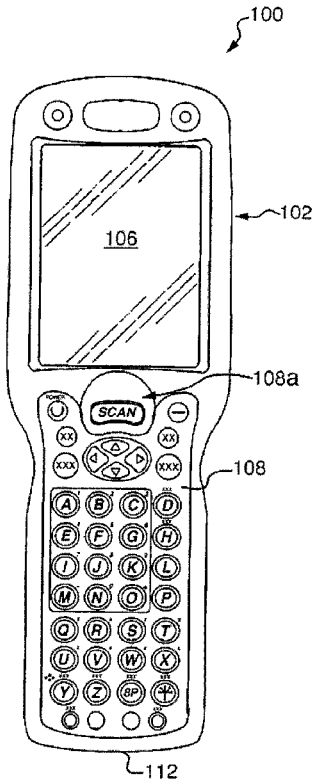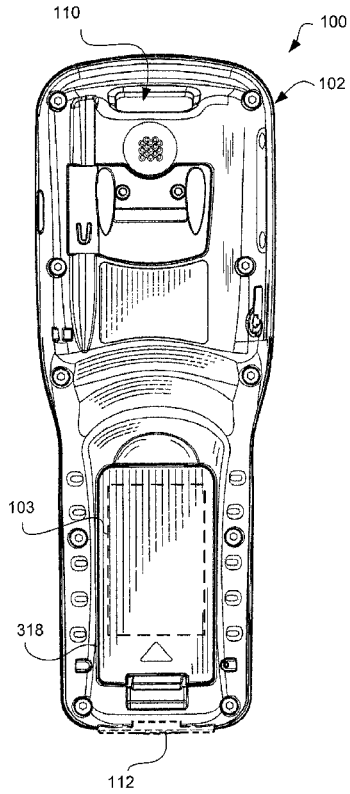
15 Claims, 5 Drawing Sheets