US009410786B2

(12) **United States Patent**
Chang et al.

(10) **Patent No.: US 9,410,786 B2**
(45) **Date of Patent: Aug. 9, 2016**

(54) **COORDINATE MEASURING APPARATUS**

(71) Applicants: **HONG FU JIN PRECISION INDUSTRY (ShenZhen) CO., LTD.**, Shenzhen (CN); **HON HAI PRECISION INDUSTRY CO., LTD.**, New Taipei (TW)

(72) Inventors: **Chih-Kuang Chang**, New Taipei (TW); **Jun-Song Xu**, Shenzhen (CN); **Sheng-Qiang Shen**, Shenzhen (CN); **Jun-Hua Li**, Shenzhen (CN)

(73) Assignees: **HONG FU JIN PRECISION INDUSTRY (ShenZhen) CO., LTD.**, Shenzhen (CN); **HON HAI PRECISION INDUSTRY CO., LTD.**, New Taipei (TW)

(*) Notice: Subject to any disclaimer, the term of this patent is extended or adjusted under 35 U.S.C. 154(b) by 261 days.

(21) Appl. No.: **14/093,591**

(22) Filed: **Dec. 2, 2013**

(65) **Prior Publication Data**

US 2015/0000147 A1 Jan. 1, 2015

(30) **Foreign Application Priority Data**

Jun. 28, 2013 (CN) 2013 1 0268370

(51) **Int. Cl.**
G01B 5/00 (2006.01)
G01B 5/008 (2006.01)

(52) **U.S. Cl.**
CPC ***G01B 5/008*** (2013.01); ***G01B 5/0009*** (2013.01)

(58) **Field of Classification Search**
CPC G01B 5/004; G01B 5/008; G01B 11/00
USPC 33/503
See application file for complete search history.

(56) **References Cited**

U.S. PATENT DOCUMENTS

5,042,162 A * 8/1991 Helms F16F 7/1005 33/503
6,158,136 A * 12/2000 Gotz G01B 3/008 33/503
7,627,957 B2 * 12/2009 Uhl G01B 21/047 33/503
7,779,553 B2 * 8/2010 Jordil G01B 21/04 33/558
2009/0013549 A1 * 1/2009 Lutz B23Q 1/0054 33/503
2010/0132432 A1 * 6/2010 Wallace G01B 21/045 33/503
2012/0079731 A1 * 4/2012 Ruck G01B 5/012 33/503
2012/0084989 A1 * 4/2012 Pettersson G01B 21/045 33/503
2014/0007441 A1 * 1/2014 Pettersson G01B 21/045 33/503
2014/0259715 A1 * 9/2014 Engel G01B 5/008 33/503
2015/0000147 A1 * 1/2015 Chang G01B 5/0009 33/503
2015/0052770 A1 * 2/2015 Noda G01B 21/042 33/503
2015/0285616 A1 * 10/2015 Jordil G01B 21/047 33/503
2015/0300798 A1 * 10/2015 Pettersson G01B 5/008 33/503

* cited by examiner

Primary Examiner — Yaritza Guadalupe-McCall
(74) *Attorney, Agent, or Firm* — ScienBiziP, P.C.

(57) **ABSTRACT**

A coordinate measuring apparatus includes a base body, a delivery unit located on the base body, and a probing unit. The delivery unit includes a power assembly, a first lead screw assembly connected to the power assembly, and a second lead screw assembly connected to the first lead screw assembly and the probing unit. The power assembly is configured for driving the first lead screw assembly to move along a first direction. The first lead screw assembly is configured for driving the second lead screw assembly to move along a second direction. The second lead screw assembly is configured for driving the probing unit to move along a third direction.
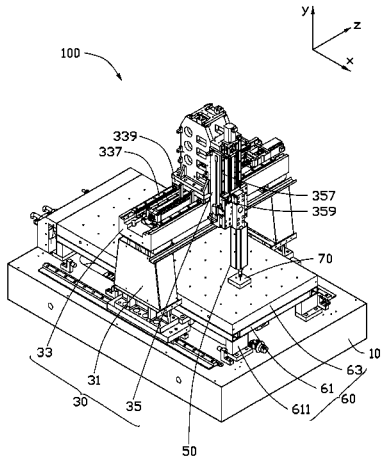
20 Claims, 4 Drawing Sheets