US007710086B1

(12) **United States Patent**
Stamps et al.

(10) **Patent No.: US 7,710,086 B1**
(45) **Date of Patent: May 4, 2010**

(54) **MODULAR HIGH VOLTAGE POWER SUPPLY FOR CHEMICAL ANALYSIS**

(75) Inventors: **James F. Stamps**, Livermore, CA (US); **Daniel D. Yee**, Dublin, CA (US)

(73) Assignee: **Sandia Corporation**, Livermore, CA (US)

(*) Notice: Subject to any disclaimer, the term of this patent is extended or adjusted under 35 U.S.C. 154(b) by 276 days.

(21) Appl. No.: **12/128,342**

(22) Filed: **May 28, 2008**

Related U.S. Application Data

(62) Division of application No. 10/414,979, filed on Apr. 16, 2003, now Pat. No. 7,161,334.

(51) **Int. Cl.**
G05F 1/40 (2006.01)
G05F 5/00 (2006.01)

(52) **U.S. Cl.** **323/266**; 323/275; 323/285; 323/292; 323/902

(58) **Field of Classification Search** 323/266, 323/272, 275, 276, 277, 280, 283, 284, 285, 323/291–298, 902
See application file for complete search history.

(56) **References Cited**

U.S. PATENT DOCUMENTS

4,056,719	A *	11/1977	Waaben	398/158
4,354,148	A *	10/1982	Tada et al.	320/148
5,154,172	A *	10/1992	Terry et al.	607/64
5,977,796	A *	11/1999	Gabara	326/86
6,788,150	B2 *	9/2004	Joly et al.	330/296
7,161,334	B1 *	1/2007	Stamps et al.	323/266
7,400,119	B1 *	7/2008	Stamps et al.	323/266

* cited by examiner

Primary Examiner—Jessica Han
(74) *Attorney, Agent, or Firm*—Cascio, Schmoyer & Zervas; Timothy P. Evans

(57) **ABSTRACT**

A high voltage power supply for use in a system such as a microfluidics system, uses a DC-DC converter in parallel with a voltage-controlled resistor. A feedback circuit provides a control signal for the DC-DC converter and voltage-controlled resistor so as to regulate the output voltage of the high voltage power supply, as well as, to sink or source current from the high voltage supply.
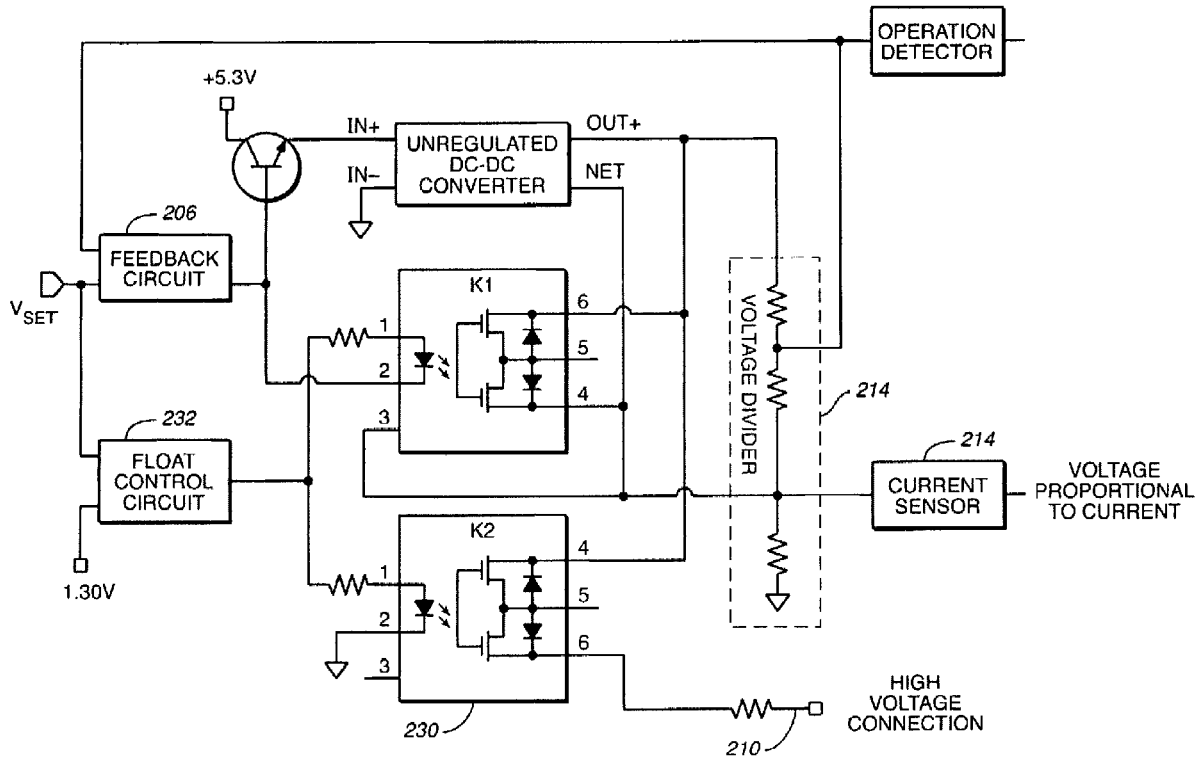
7 Claims, 10 Drawing Sheets