US009409686B2

(12) **United States Patent**
Cooper

(10) **Patent No.: US 9,409,686 B2**
(45) **Date of Patent: Aug. 9, 2016**

(54) **WICK TO INDICATE PACKAGE OPENING**

(71) Applicant: **Owens-Brockway Glass Container Inc.**, Perrysburg, OH (US)

(72) Inventor: **Scott P. Cooper**, Perrysburg, OH (US)

(73) Assignee: **Owens—Brockway Glass Container Inc.**, Perrysburg, OH (US)

(*) Notice: Subject to any disclaimer, the term of this patent is extended or adjusted under 35 U.S.C. 154(b) by 583 days.

(21) Appl. No.: **13/832,628**

(22) Filed: **Mar. 15, 2013**

(65) **Prior Publication Data**

US 2014/0260116 A1 Sep. 18, 2014

(51) **Int. Cl.**
B65D 55/02 (2006.01)
B65D 25/00 (2006.01)
B65D 51/24 (2006.01)

(52) **U.S. Cl.**
CPC ***B65D 55/026*** (2013.01); ***B65D 25/00*** (2013.01); ***B65D 51/248*** (2013.01); *B65D 2101/0084* (2013.01); *B65D 2203/12* (2013.01)

(58) **Field of Classification Search**
CPC B65D 55/026; B65D 2101/00; B65D 5101/0084; B65D 2203/12; B65D 51/248
USPC 215/901, 366, 200–364; 220/705–709, 220/200–380
See application file for complete search history.

(56) **References Cited**

U.S. PATENT DOCUMENTS

765,439	A	7/1904	Pike	
2,235,453	A	3/1941	Kirmes	
3,399,811	A	9/1968	Miller	
3,724,756	A *	4/1973	Maltenfort	B65D 51/32 239/44
4,424,911	A	1/1984	Resnick	
4,480,760	A	11/1984	Schonberger	
4,489,841	A	12/1984	Thompson	
4,511,052	A	4/1985	Klein et al.	
4,601,404	A	7/1986	Shivers	
4,733,786	A	3/1988	Emslander	
4,905,851	A	3/1990	Thompson	
5,145,079	A	9/1992	Woodrow et al.	
6,325,247	B1	12/2001	Iggulden	
2005/0061814	A1 *	3/2005	Jackel	A47G 19/2266 220/259.1

FOREIGN PATENT DOCUMENTS

FR	2 611 659 A2	9/1988
JP	H11318242	11/1999

OTHER PUBLICATIONS

PCT Int Search Report and Written Opinion, Serial No. PCT/US2014/020962, Int Filing Date: Mar. 6, 2014, Applicant: Owens-Brockway Glass Container Inc., Date of Mailing: May 19, 2014.

* cited by examiner

Primary Examiner — Jeffrey Allen
Assistant Examiner — Jennifer Castriotta

(57) **ABSTRACT**

A product includes a container having an interior surface, an exterior surface, and a lip between the interior and exterior surfaces, and a wick having a first end disposed inside the container, a second end disposed outside of the container, and an intermediate portion extending across the lip of the container. A package may include the product, a liquid product carried within the container, and a closure coupled to the container to squeeze the wick to interrupt flow of the liquid product therethrough.
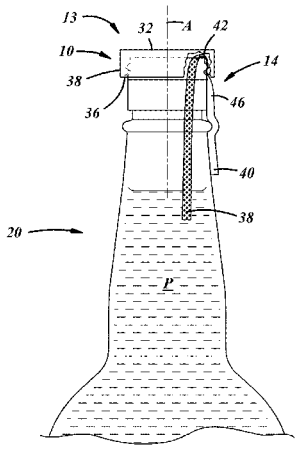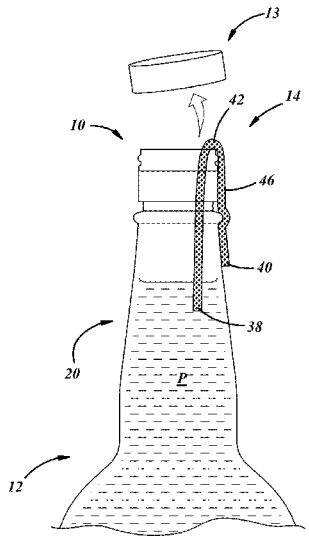
17 Claims, 2 Drawing Sheets