US009409086B2

(12) **United States Patent**
Fujino et al.

(10) **Patent No.: US 9,409,086 B2**
(45) **Date of Patent: Aug. 9, 2016**

(54) **GAMING DEVICE WITH OMNI-REACH SHOULDER BUTTONS**

(71) Applicant: **NINTENDO CO., LTD.**, Kyoto (JP)

(72) Inventors: **Takaki Fujino**, Kyoto (JP); **Yui Ehara**, Kyoto (JP)

(73) Assignee: **NINTENDO CO., LTD.**, Kyoto (JP)

(*) Notice: Subject to any disclaimer, the term of this patent is extended or adjusted under 35 U.S.C. 154(b) by 289 days.

(21) Appl. No.: **14/085,126**

(22) Filed: **Nov. 20, 2013**

(65) **Prior Publication Data**

US 2015/0057079 A1 Feb. 26, 2015

(30) **Foreign Application Priority Data**

Aug. 26, 2013 (JP) 2013-174092

(51) **Int. Cl.**

A63F 13/00	(2014.01)
A63F 13/90	(2014.01)
A63F 13/92	(2014.01)
A63F 13/24	(2014.01)
G06F 1/16	(2006.01)

(52) **U.S. Cl.**

CPC ***A63F 13/08*** (2013.01); ***A63F 13/24*** (2014.09); ***A63F 13/92*** (2014.09); ***G06F 1/1626*** (2013.01); ***G06F 1/1662*** (2013.01); *G06F 1/1692* (2013.01)

(58) **Field of Classification Search**

CPC A63F 13/08; A63F 13/24; A63F 13/26; A63F 13/92; G06F 1/1626

USPC 463/46

See application file for complete search history.

(56) **References Cited**

U.S. PATENT DOCUMENTS

4,542,903	A *	9/1985	Yokoi et al.	463/31
2005/0113158	A1*	5/2005	Sterchi et al.	463/3
2006/0258464	A1*	11/2006	Kawanobe et al.	463/46
2007/0202956	A1*	8/2007	Ogasawara et al.	463/46
2010/0235621	A1*	9/2010	Winkler et al.	713/153
2011/0264160	A1	10/2011	Lenz et al.	
2011/0304640	A1	12/2011	Noge	
2011/0306412	A1*	12/2011	Ehara et al.	463/31
2013/0109473	A1	5/2013	Yamashita et al.	

FOREIGN PATENT DOCUMENTS

EP	2 557 478	2/2013
JP	2011-258156	12/2011
WO	WO 97/00713	1/1997

OTHER PUBLICATIONS

"Installing the Vonage Phone Device", [dated Aug. 4, 2011]. [online], [retrieved Oct. 29, 2015]. Retrieved from the Internet <URL:http://www.youtube.com/watch?v=h64TIgcJ1UY>. 1 page.*

(Continued)

Primary Examiner — Lawrence Galka

(74) *Attorney, Agent, or Firm* — Nixon & Vanderhye P.C.

(57) **ABSTRACT**

An example of an information processing apparatus is portable and performs predetermined processing in accordance with a user operation. The information processing apparatus includes: a plate-like housing so shaped that a thickness of an upper side surface of the housing is greater than a thickness of a lower side surface of the housing such that the closer to the lower side surface, the thinner the housing; and at least one operation button provided on the upper side surface of the housing.
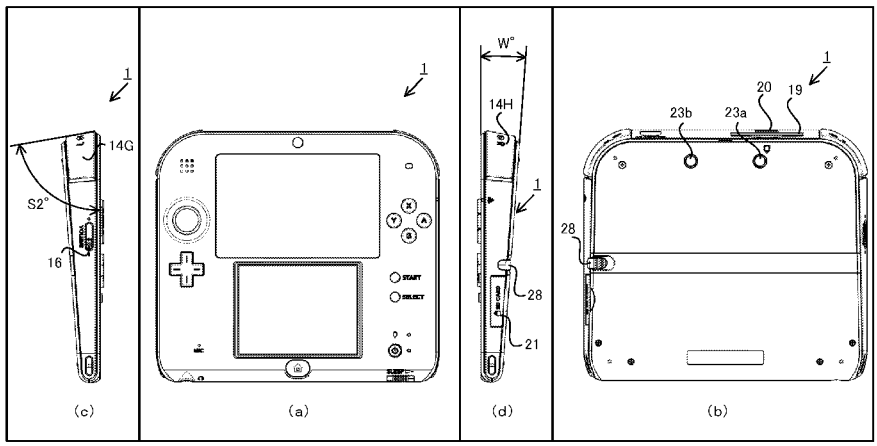
14 Claims, 7 Drawing Sheets