US009408686B1

(12) **United States Patent**
Miller et al.

(10) **Patent No.: US 9,408,686 B1**
(45) **Date of Patent: Aug. 9, 2016**

(54) **DEVICES, SYSTEMS AND METHODS FOR MANUFACTURING ORTHOPEDIC IMPLANTS**

(71) Applicant: **ConforMIS, Inc.**, Bedford, MA (US)

(72) Inventors: **Bob Miller**, Secaucus, NJ (US); **Ernest A. Dion**, Danvers, MA (US); **David P. Hesketh**, Methuen, MA (US); **Manuel J. Salinas**, North Andover, MA (US); **Philipp Lang**, Lexington, MA (US)

(73) Assignee: **ConforMIS, Inc.**, Bedford, MA (US)

(*) Notice: Subject to any disclaimer, the term of this patent is extended or adjusted under 35 U.S.C. 154(b) by 376 days.

(21) Appl. No.: **13/746,742**

(22) Filed: **Jan. 22, 2013**

Related U.S. Application Data

(60) Provisional application No. 61/589,163, filed on Jan. 20, 2012.

(51) **Int. Cl.**
A61F 2/02 (2006.01)
B23P 17/00 (2006.01)
A61F 2/30 (2006.01)

(52) **U.S. Cl.**
CPC . ***A61F 2/02*** (2013.01); ***B23P 17/00*** (2013.01); *A61F 2/30* (2013.01); *A61F 2002/30317* (2013.01); *Y10T 29/49995* (2015.01); *Y10T 29/49996* (2015.01); *Y10T 29/49998* (2015.01)

(58) **Field of Classification Search**
CPC ... A61F 2/02; A61F 2/30; A61F 2002/30317; B23P 17/00; Y10T 29/49995; Y10T 29/49996; Y10T 29/49998
See application file for complete search history.

(56) **References Cited**

U.S. PATENT DOCUMENTS

4,673,409	A	6/1987	Van Kampen	623/23
4,822,365	A	4/1989	Walker et al.	623/20
4,841,975	A	6/1989	Woolson	128/653
4,936,862	A	6/1990	Walker et al.	623/23
5,007,936	A	4/1991	Woolson	623/23
5,067,964	A	11/1991	Richmond et al.	623/18
5,129,908	A	7/1992	Petersen	606/88
5,246,530	A	9/1993	Bugle et al.	156/643
5,274,565	A	12/1993	Reuben	364/474.24
5,365,996	A	11/1994	Crook	164/45
5,507,820	A	4/1996	Pappas	623/20
5,682,886	A	11/1997	Delp et al.	128/653.1
5,735,277	A	4/1998	Schuster	128/653.1
5,741,215	A	4/1998	D'Urso	600/407
5,768,134	A	6/1998	Swaelens et al.	364/468.28

(Continued)

FOREIGN PATENT DOCUMENTS

CN	1480111	A	3/2004	A61F 2/30
DE	3933459	A1	4/1991	A61F 2/00

(Continued)

OTHER PUBLICATIONS

Birnbaum et al., "Computer-Assisted Orthopedic Surgery With Individual Templates and Comparison to Conventional Operation Method", Spine, vol. 26, No. 4, pp. 365-369, Feb. 2001.

(Continued)

Primary Examiner — John C Hong
(74) *Attorney, Agent, or Firm* — Sunstein Kann Murphy & Timbers LLP

(57) **ABSTRACT**

Methods, system, devices, processes and techniques are disclosed for manufacturing orthopedic implants utilizing blanks and/or fixtures.
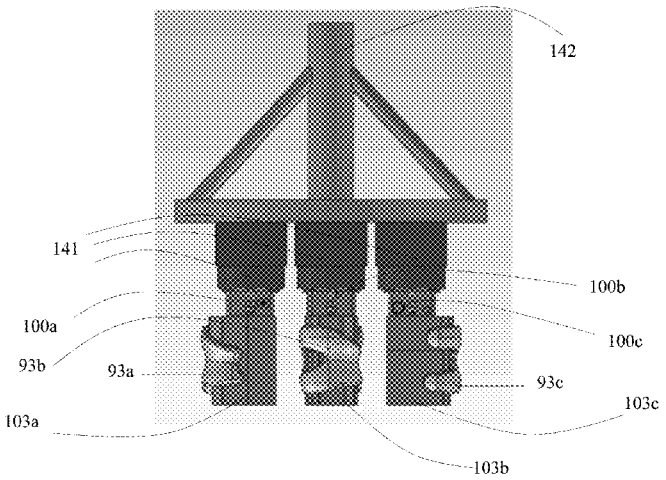
10 Claims, 11 Drawing Sheets