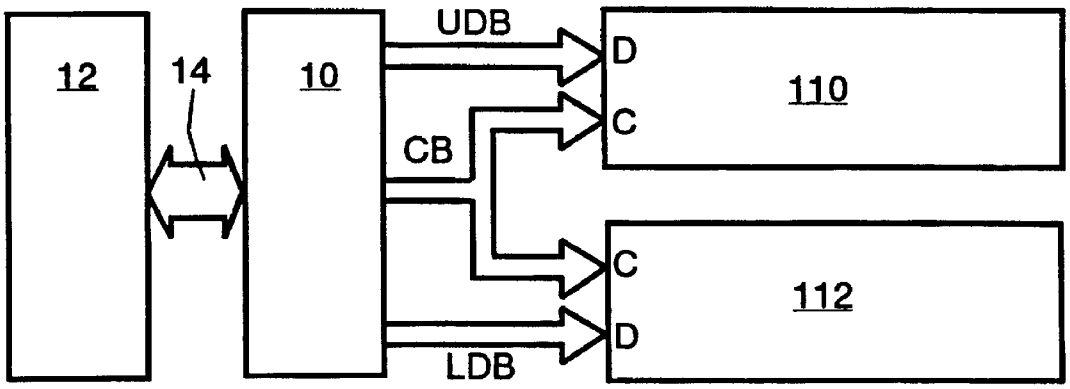

Fig. 1

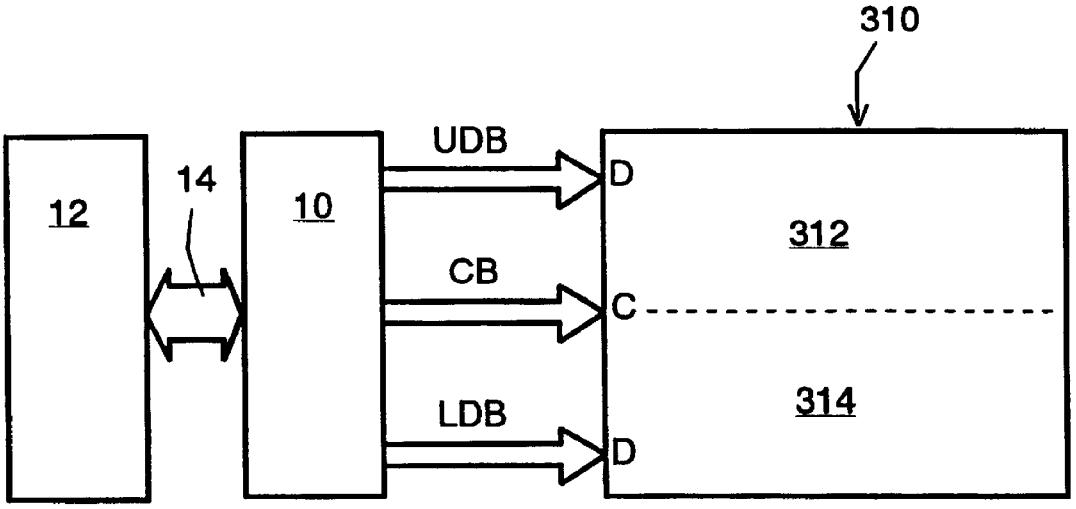

Fig. 3
(PRIOR ART)