US007793585B2

(12) **United States Patent**
Rasmussen et al.

(10) **Patent No.: US 7,793,585 B2**
(45) **Date of Patent: Sep. 14, 2010**

(54) **DISPOSABLE BREWING DEVICE**

(75) Inventors: **Ulrik Skovgaard Rasmussen**, Middelfart (DK); **Werner Schulz**, Horsens (DK)

(73) Assignee: **Columbus E. ApS** (DK)

(*) Notice: Subject to any disclaimer, the term of this patent is extended or adjusted under 35 U.S.C. 154(b) by 839 days.

(21) Appl. No.: **11/579,240**

(22) PCT Filed: **Apr. 13, 2005**

(86) PCT No.: **PCT/DK2005/000249**

§ 371 (c)(1),
(2), (4) Date: **Oct. 31, 2006**

(87) PCT Pub. No.: **WO2005/105606**

PCT Pub. Date: **Nov. 10, 2005**

(65) **Prior Publication Data**

US 2007/0199453 A1 Aug. 30, 2007

(30) **Foreign Application Priority Data**

May 5, 2004 (WO) PCT/DK2004/000310

(51) **Int. Cl.**
A47J 31/00 (2006.01)
B65D 81/00 (2006.01)

(52) **U.S. Cl.** **99/323**; 99/295; 99/317; 99/322; 426/79; 426/82; 426/433

(58) **Field of Classification Search** ..... 99/323, 99/295, 317, 322, 302 R; 426/77, 78, 79, 426/112, 113, 115, 433, 82
See application file for complete search history.

(56) **References Cited**

U.S. PATENT DOCUMENTS

3,199,437	A	8/1965	Nelsen	
3,352,226	A	11/1967	Nelsen	
3,372,634	A *	3/1968	Brinkman et al.	99/292
4,886,674	A	12/1989	Seward et al.	
5,390,587	A *	2/1995	Wu	99/279
5,842,408	A	12/1998	Hata	
6,277,547	B1 *	8/2001	Bourdelais et al.	430/432
D448,602	S	10/2001	Bodum	
6,622,615	B2 *	9/2003	Heczko	99/323.3

FOREIGN PATENT DOCUMENTS

DE	609 794	2/1935
JP	62-10828	1/1987
JP	4210010 A	7/1992
JP	7-24225	5/1995

* cited by examiner

Primary Examiner—Reginald L Alexander
(74) *Attorney, Agent, or Firm*—Cantor Colburn LLP

(57) **ABSTRACT**

The invention relates to a disposable brewing device including at least one contact volume connectable with at least one target volume, the at least one contact volume and the at least one target volume being separated by at least one filter arrangement, the at least one contact volume and the at least one target volume defining at least one predefined flow path through filter arrangement.
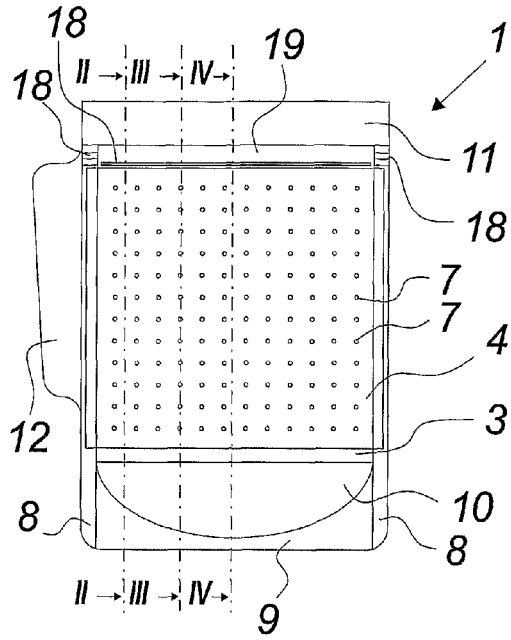
58 Claims, 9 Drawing Sheets