United States Patent [19]

Mosehauer

[11] **4,287,285**

[45] **Sep. 1, 1981**

[54] **METHOD AND APPARATUS FOR FABRICATING PERSONAL IDENTIFICATION DOCUMENTS**

[75] Inventor: **Michael W. Mosehauer,** Spencerport, N.Y.

[73] Assignee: **Eastman Kodak Company,** Rochester, N.Y.

[21] Appl. No.: **104,473**

[22] Filed: **Dec. 17, 1979**

Related U.S. Application Data

[63] Continuation of Ser. No. 952,423, Oct. 18, 1978, abandoned.

[51] **Int. Cl.**[3] **G03G 13/16;** G03G 13/22

[52] **U.S. Cl.** **430/124;** 156/277; 156/300; 428/204; 428/916; 40/2.2; 283/7; 430/126

[58] **Field of Search** 430/126, 124; 40/2.2; 283/7; 156/277, 300; 428/204, 916; 118/659, 660, 661, 662

[56] **References Cited**

U.S. PATENT DOCUMENTS

3,549,447	12/1970	Bresnick	430/126
3,698,314	10/1972	Grier	430/126
3,788,995	1/1974	Stahly et al.	430/115 X
4,006,050	2/1977	Hurst et al.	40/2.2 X
4,097,279	6/1978	Whitehead	283/7 X

FOREIGN PATENT DOCUMENTS

6802720	8/1968	Netherlands	430/126
1179198	1/1970	United Kingdom .	
1413832	11/1975	United Kingdom .	

Primary Examiner—Roland E. Martin, Jr.
Attorney, Agent, or Firm—John D. Husser

[57] **ABSTRACT**

Personal identification documents are fabricated by liquid developing an electrostatic image on a photoconductive insulating member to form a high resolution toner image which includes a visually verifiable feature of the authorized document holder and thermally transferring such image from the photoconductor to a core substrate having general authenticating data or to a cover sheet which is subsequently laminated to such a core substrate.
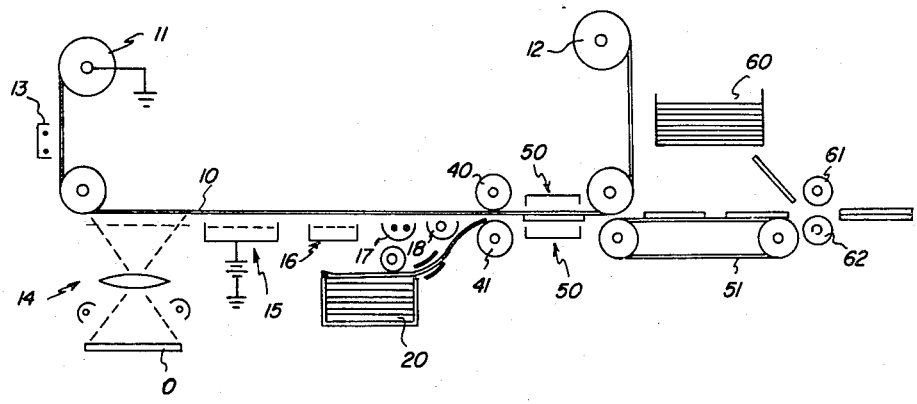
3 Claims, 4 Drawing Figures