US006067985A

United States Patent [19]

Islava

[11] **Patent Number: 6,067,985**

[45] **Date of Patent: May 30, 2000**

[54] **ADJUSTABLE ENDOTRACHEAL TUBE HOLDER**

[76] Inventor: **Steven T. Islava**, 315 Marigold, Corona del Mar, Calif. 92625

[21] Appl. No.: **08/805,634**

[22] Filed: **Feb. 26, 1997**

Related U.S. Application Data

[63] Continuation-in-part of application No. 08/608,130, Feb. 28, 1996, abandoned.

[51] **Int. Cl.**[7] **A61M 16/00**; A62B 9/06

[52] **U.S. Cl.** **128/207.17**; 128/207.14; 128/DIG. 26; 128/200.26

[58] **Field of Search** ..... 128/207.14, 207.17, 128/912, DIG. 26, 200.26

[56] **References Cited**

U.S. PATENT DOCUMENTS

3,568,679	3/1971	Reif	128/DIG. 26
4,683,882	8/1987	Laird	128/207.17
4,742,824	5/1988	Payton et al.	128/DIG. 26
4,832,019	5/1989	Weinstein et al.	128/207.17
4,906,234	3/1990	Voychehovski	128/207.17
5,105,807	4/1992	Kahn et al.	128/DIG. 26
5,345,931	9/1994	Battaglia, Jr.	128/207.17
5,419,319	5/1995	Werner	128/207.17
5,437,273	8/1995	Bates et al.	128/207.17

Primary Examiner—Kimberly L. Asher
Attorney, Agent, or Firm—Harold L. Jackson

[57] **ABSTRACT**

An endotracheal tube-holder assembly that includes an arcuate track member and a pair of face plates mounted at the free ends thereof for engaging the opposite sides or cheeks of a patient's face, and wherein an adjustable holding block assembly is slidably mounted on the track member which defines a support housing that includes a tube holding block and a bite block support in which a removable bite block is mounted.
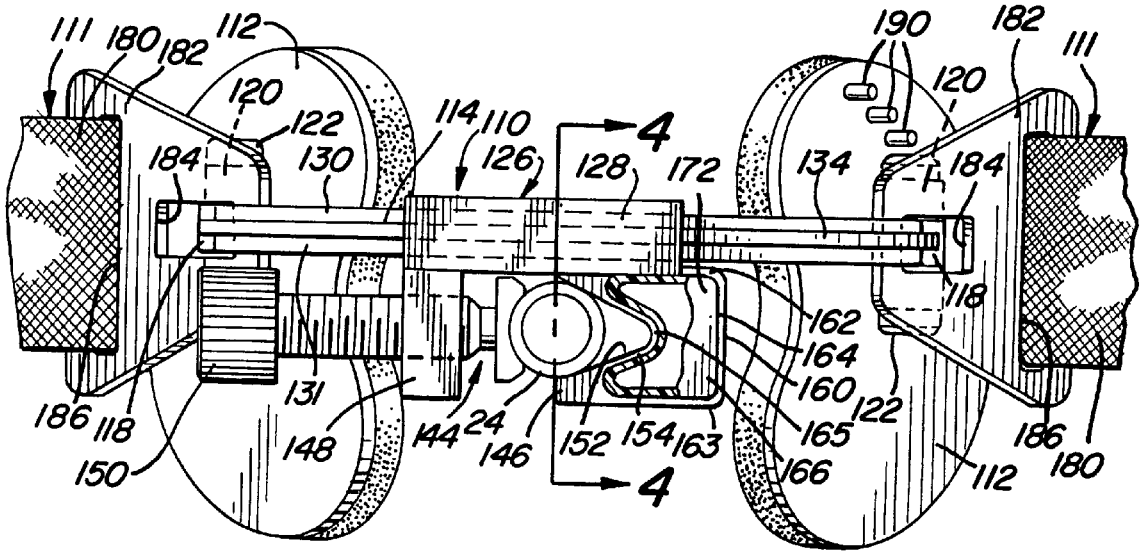
33 Claims, 3 Drawing Sheets