July 31, 1951 C. D. GROSS 2,562,185

PUSH-BUTTON SWITCH

Filed March 3, 1949

FIG. 1

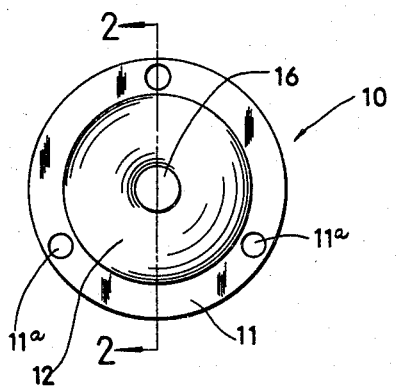

FIG. 2

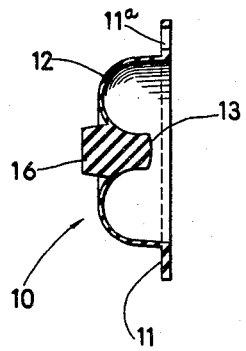

FIG. 3

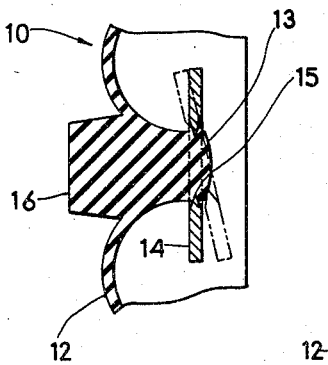

FIG. 4

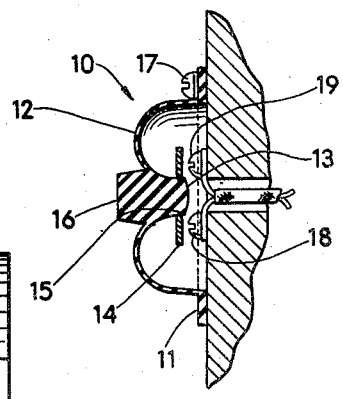

FIG. 5

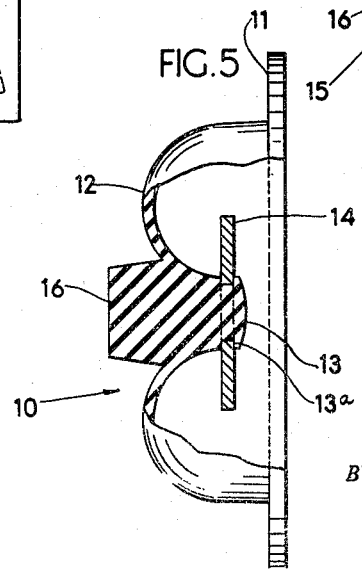

INVENTOR.
CLARENCE D. GROSS

BY William Cleland

Attorney