A. E. PAIGE.

MULTIFOCAL OPTICAL ELEMENT AND METHOD AND MEANS FOR MAKING THE SAME.

APPLICATION FILED OCT. 22, 1919.

1,351,785. **Patented Sept. 7, 1920.**

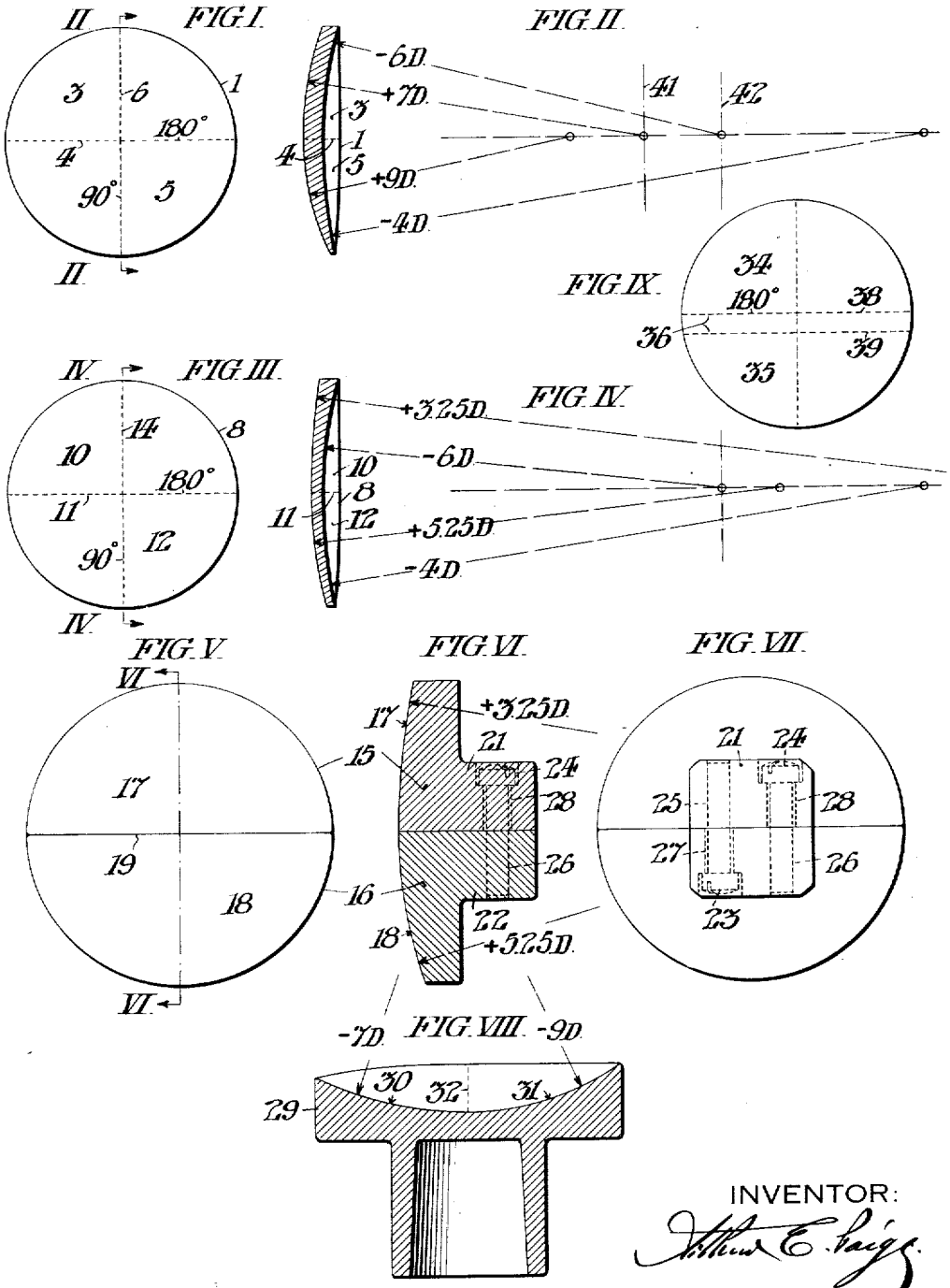

INVENTOR:

Arthur E. Paige.