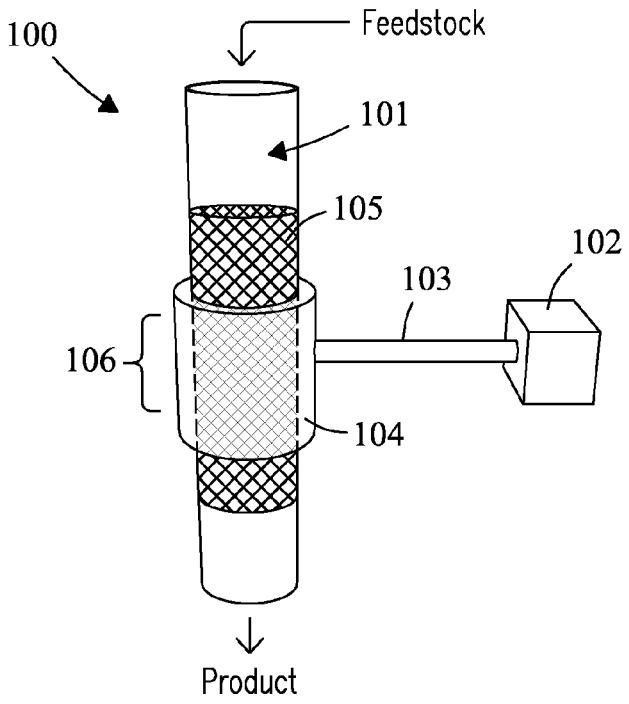
100
Feedstock
101
105
102
103
106
104
Product

FIG. 1

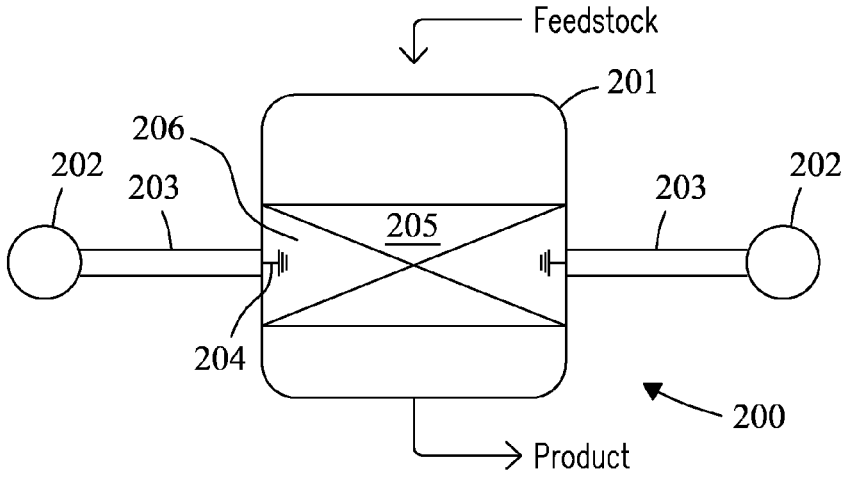
Feedstock
201
206
202
203
205
203
202
204
200
Product

FIG. 2