US009638485B2

(12) **United States Patent**
Geissele

(10) **Patent No.: US 9,638,485 B2**
(45) **Date of Patent: May 2, 2017**

(54) **TRIGGER MECHANISM FOR A FIREARM**

(71) Applicant: **WHG Properties, LLC**, North Wales, PA (US)

(72) Inventor: **William H. Geissele**, Lower Gwynedd, PA (US)

(73) Assignee: **WHG Properties, LLC**, North Wales, PA (US)

(*) Notice: Subject to any disclaimer, the term of this patent is extended or adjusted under 35 U.S.C. 154(b) by 0 days.

(21) Appl. No.: **14/723,830**

(22) Filed: **May 28, 2015**

(65) **Prior Publication Data**

US 2016/0178304 A1 Jun. 23, 2016

Related U.S. Application Data

(63) Continuation-in-part of application No. 29/512,565, filed on Dec. 19, 2014, now Pat. No. Des. 755,339.

(51) **Int. Cl.**

F41A 19/10	(2006.01)
F41A 19/14	(2006.01)
F41A 19/12	(2006.01)
F41A 17/46	(2006.01)
F41A 19/16	(2006.01)

(52) **U.S. Cl.**

CPC ***F41A 19/10*** (2013.01); ***F41A 17/46*** (2013.01); ***F41A 19/12*** (2013.01); ***F41A 19/14*** (2013.01); ***F41A 19/16*** (2013.01)

(58) **Field of Classification Search**

CPC F41A 19/10; F41A 19/16; F41A 19/45
USPC 42/69.01, 69.03
See application file for complete search history.

(56) **References Cited**

U.S. PATENT DOCUMENTS

D462,105	S	8/2002	Myers	
6,615,527	B1 *	9/2003	Martin	F41A 19/46 42/20
6,772,548	B1 *	8/2004	Power	F41A 19/10 42/69.03
D504,168	S	4/2005	McCormick	
7,600,338	B2	10/2009	Geissele	
7,854,084	B1 *	12/2010	Rutherford	F41A 19/10 42/69.01
8,069,602	B2 *	12/2011	Geissele	F41A 19/16 42/69.03
D659,790	S	5/2012	Geissele	
D740,907	S	10/2015	Oglesby	
2008/0060245	A1 *	3/2008	McCormick	F41A 19/10 42/69.01
2014/0366418	A1 *	12/2014	Stakes	F41A 19/10 42/69.03

* cited by examiner

Primary Examiner — Reginald Tillman, Jr.
(74) *Attorney, Agent, or Firm* — Merchant & Gould, P.C.

(57) **ABSTRACT**

A trigger mechanism for a firearm provides modified and/or adjustable trigger pull length, reduced sear pressure, reduced reset trigger slap, and/or improved engagement of the trigger safety.
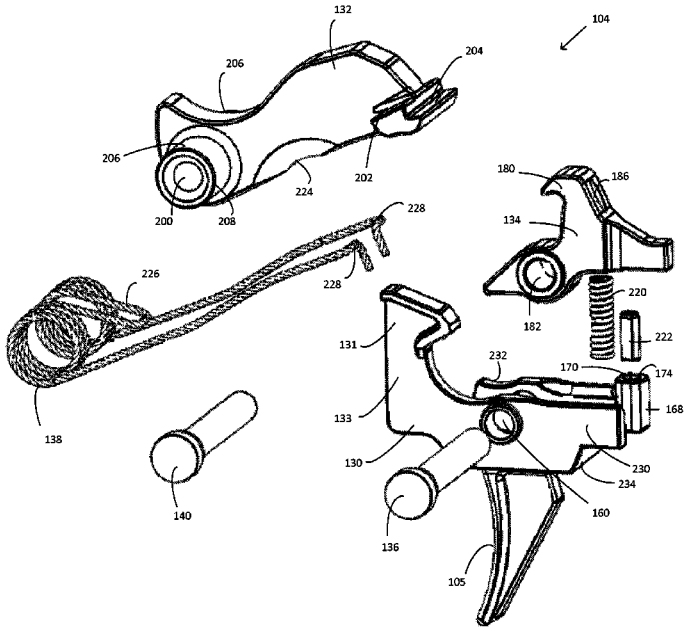
15 Claims, 12 Drawing Sheets