May 24, 1960 D. G. DILL 2,938,185

ELECTRICAL FUNCTION GENERATOR

Filed July 9, 1958

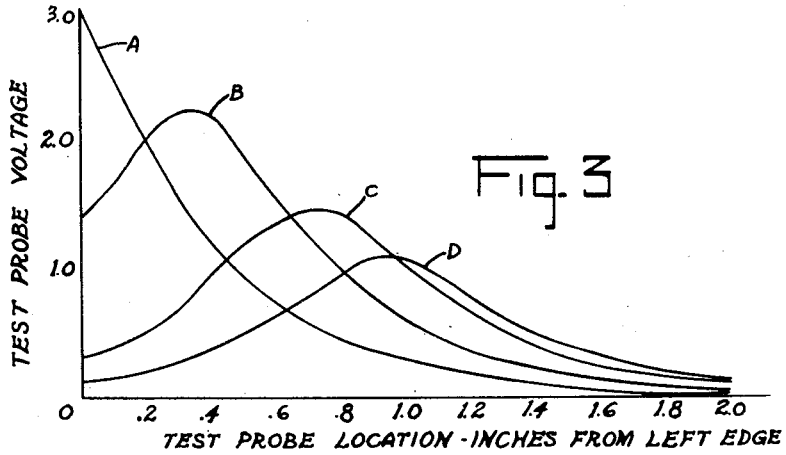


Fig. 3

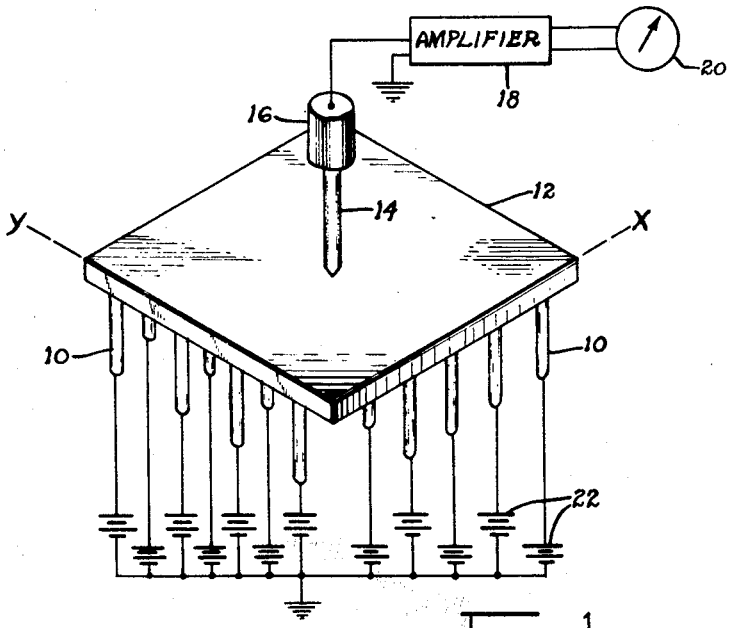


Fig. 1

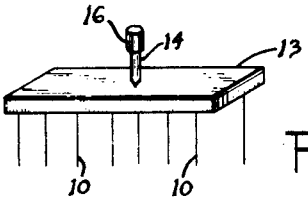


Fig. 2

INVENTOR.
DOUGLAS G. DILL, Deceased
by BEATRICE J. DILL, Administratrix
BY Lawrence S. Epstein
ATTORNEYS