US009636985B2

(12) **United States Patent**
Nakagawa

(10) **Patent No.: US 9,636,985 B2**
(45) **Date of Patent: May 2, 2017**

(54) **FUEL CELL VEHICLE**

(71) Applicant: **HONDA MOTOR CO., LTD.**, Tokyo (JP)

(72) Inventor: **Satoshi Nakagawa**, Wako (JP)

(73) Assignee: **HONDA MOTOR CO., LTD.**, Tokyo (JP)

(*) Notice: Subject to any disclaimer, the term of this patent is extended or adjusted under 35 U.S.C. 154(b) by 0 days.

(21) Appl. No.: **14/961,888**

(22) Filed: **Dec. 8, 2015**

(65) **Prior Publication Data**

US 2016/0159211 A1 Jun. 9, 2016

(30) **Foreign Application Priority Data**

Dec. 9, 2014 (JP) 2014-249216

(51) **Int. Cl.**

B60K 16/00	(2006.01)
B60K 1/04	(2006.01)
B60L 11/18	(2006.01)
B62D 25/08	(2006.01)
B62D 25/10	(2006.01)

(52) **U.S. Cl.**

CPC ***B60K 1/04*** (2013.01); ***B60L 11/1881*** (2013.01); ***B62D 25/081*** (2013.01); ***B62D 25/105*** (2013.01); *B60K 2001/0411* (2013.01); *Y02T 10/7005* (2013.01)

(58) **Field of Classification Search**

CPC B62D 25/105; B62D 25/081; B60K 1/04; B60K 16/00; B60H 1/00392; B60H 1/00564

See application file for complete search history.

(56) **References Cited**

U.S. PATENT DOCUMENTS

6,056,075	A *	5/2000	Kargilis	B62D 25/105 180/68.1
2003/0178873	A1*	9/2003	Kato	B62D 25/081 296/192
2013/0333965	A1*	12/2013	Kobayashi	B60L 11/1896 180/65.31

FOREIGN PATENT DOCUMENTS

JP	03-025084	2/1991
JP	05-521	1/1993
JP	2003-034267	2/2003
JP	2004-040950	2/2004
JP	2004-161057	6/2004

(Continued)

OTHER PUBLICATIONS

Japanese Office Action for corresponding JP Application No. 2014-249216, Dec. 6, 2016.

Primary Examiner — Hau Phan
(74) *Attorney, Agent, or Firm* — Mori & Ward, LLP

(57) **ABSTRACT**

A fuel cell vehicle includes a front compartment, a cowl top, a hood, and a blocking member. The front compartment is provided in front of a dashboard. A fuel cell is disposed in the front compartment. The cowl top is disposed between the front compartment and the dashboard and hermetically sealed from the front compartment via a sealing portion. The front compartment is opened or closed via the hood. The hood includes an outer plate and an inner plate that are joined together to provide an inner passage between the outer plate and the inner plate. The inner passage extends from the front compartment to the cowl top bypassing the sealing portion. The blocking member is disposed in the inner passage to block flow of fluid between the front compartment and the cowl top.
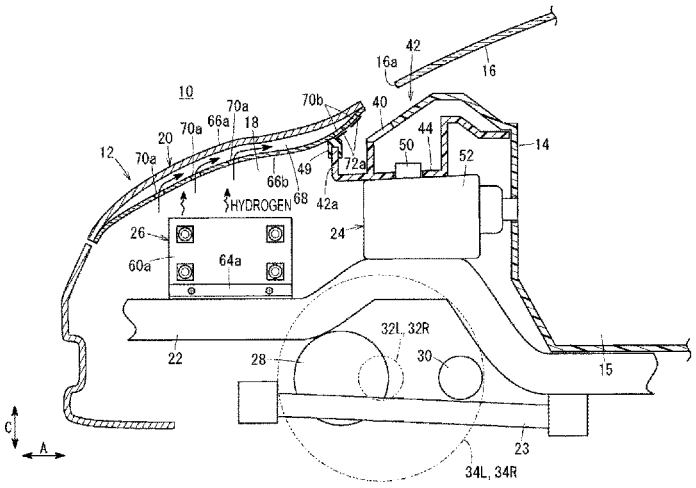
19 Claims, 6 Drawing Sheets