Oct. 26, 1943. D. W. AULD ET AL 2,332,685

TUBING MAKE-UP DEVICE

Filed April 25, 1941 2 Sheets-Sheet 1

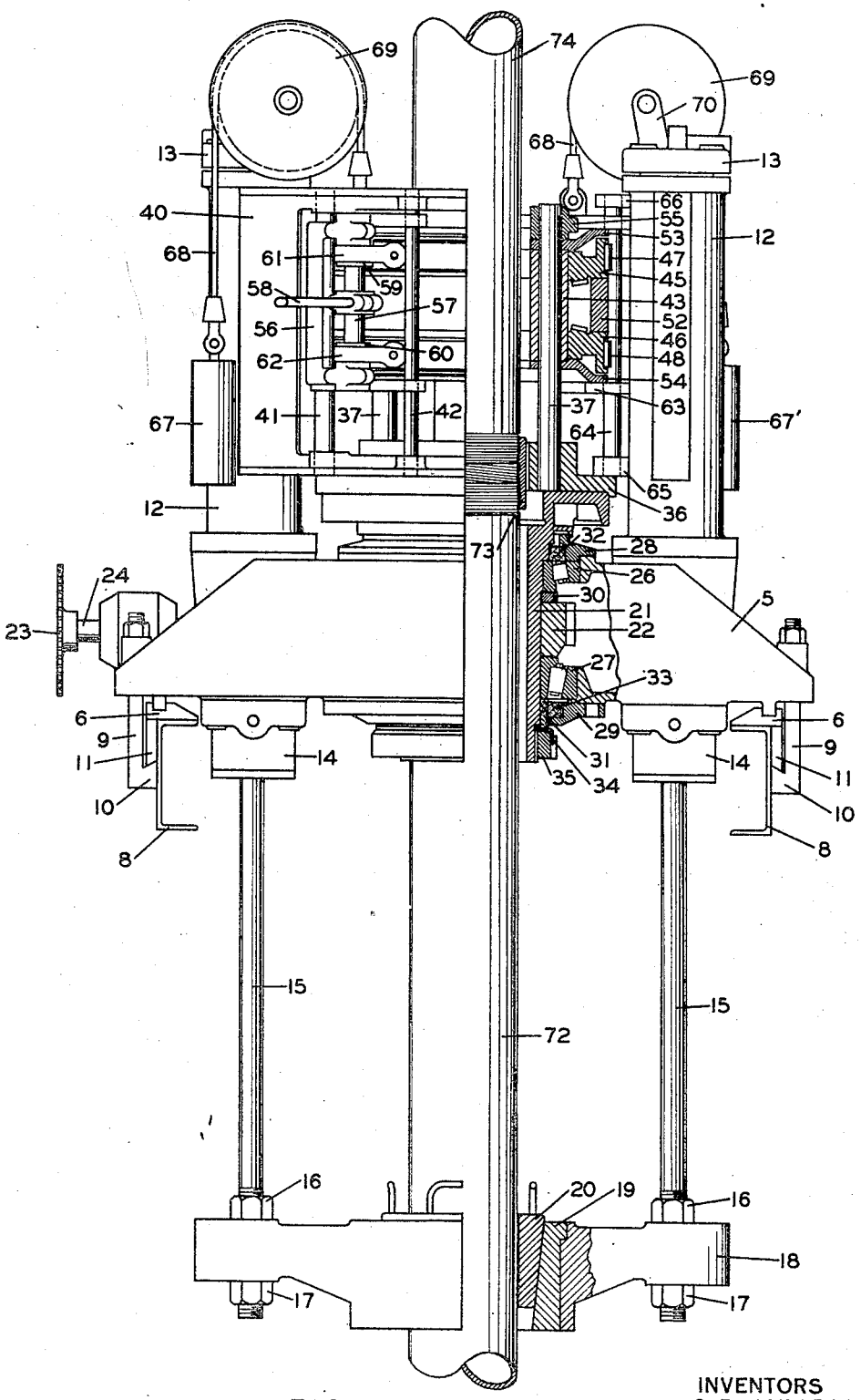

FIG. 1

INVENTORS
O. B. ANDERSON
D. W. AULD
BY
Hudson, Young, Shanley & Yunger
ATTORNEY