March 17, 1953 J. R. SIEBRANDT 2,631,585

BONE REDUCING TOOL

Filed Sept. 6, 1949 2 SHEETS—SHEET 2

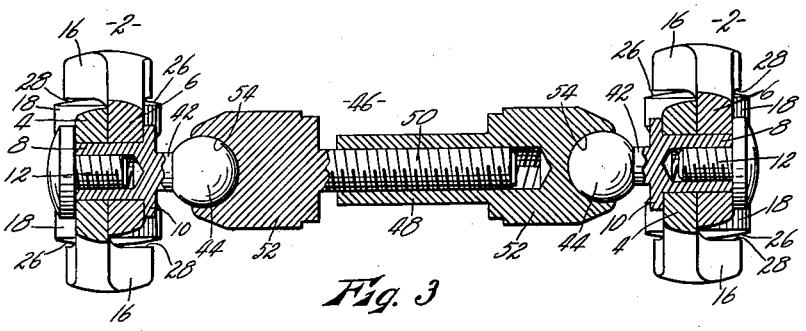

Fig. 3

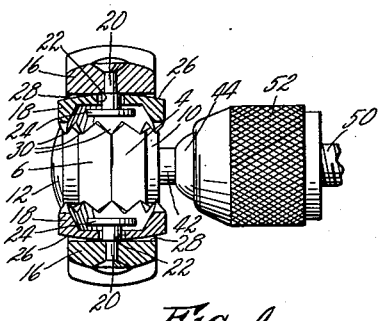

Fig. 4

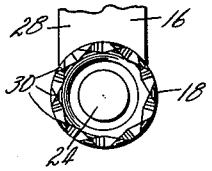

Fig. 5

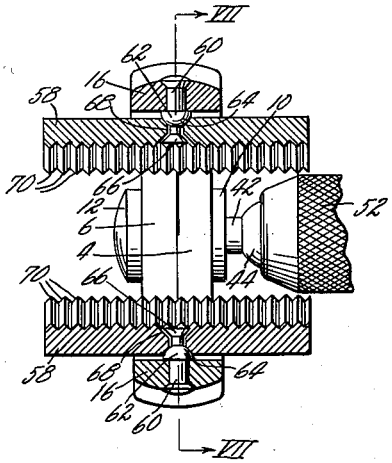

Fig. 6

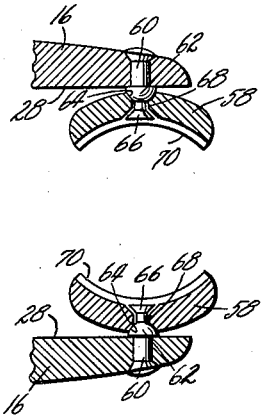

Fig. 7

INVENTOR

JOHN R. SIEBRANDT, DECEASED

BY ELIZABETH SIEBRANDT, EXECUTRIX.

BY Roy C. Hamilton,

Attorney.