United States Patent [19]

Bateson

[11] **4,428,085**

[45] **Jan. 31, 1984**

[54] **SELF-CLEANING BUILDING CONSTRUCTION**

[76] Inventor: **Frances G. Bateson,** Rte. 5, Box 695, Newburg, Oreg. 97123

[21] Appl. No.: **142,558**

[22] Filed: **Apr. 21, 1980**

[51] **Int. Cl.**[3] **A47K 4/00**

[52] **U.S. Cl.** **4/662**

[58] **Field of Search** ..... 134/18, 94, 99, 115 R, 134/198; 4/662, 449, 546

[56] **References Cited**

U.S. PATENT DOCUMENTS

3,381,312	5/1968	Whitla	4/662
3,713,176	1/1973	Stock	4/662
3,720,961	3/1973	Garvey	4/662
3,742,520	7/1973	Barnadi	4/662
3,747,129	7/1973	Dyar	4/662
3,755,826	9/1973	Roberts	4/662
3,837,011	9/1974	McTighe et al.	4/662
3,869,732	3/1975	Garvey et al.	4/662
4,233,692	11/1980	Sinsley	4/662

Primary Examiner—Henry K. Artis

Attorney, Agent, or Firm—Klarquist, Sparkman, Campbell, Leigh, Whinston & Dellett

[57] **ABSTRACT**

A self-cleaning building construction comprises apparatus for applying a fine spray or mist of water and/or water and detergent to wall, floor and ceiling surfaces, followed by warm air drying. Floors slope in a direction for removing excess moisture via a drain. Also included are closet apparatus for cleaning clothing, cupboard-dishwasher apparatus for cleaning stored dishes, self-cleaning bathtub apparatus, and self-cleaning washbasin apparatus.
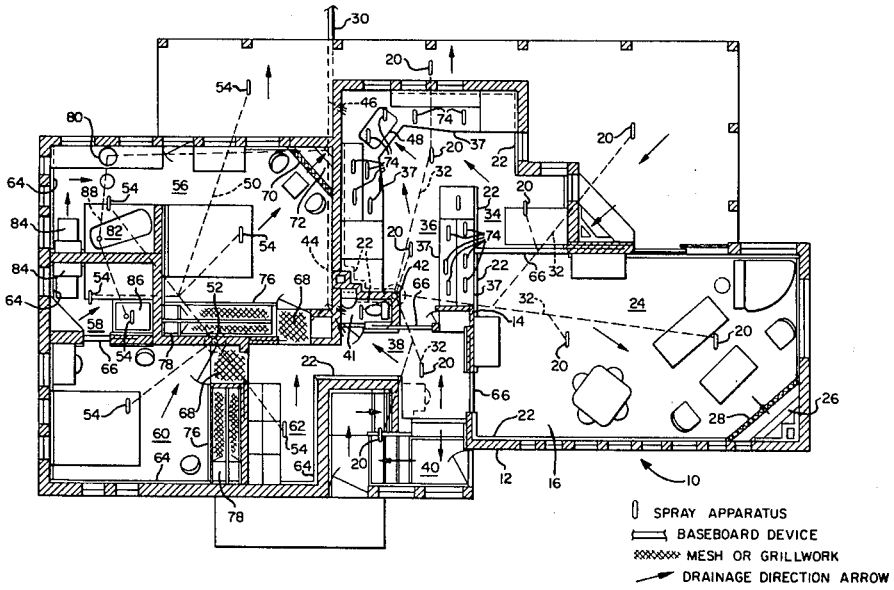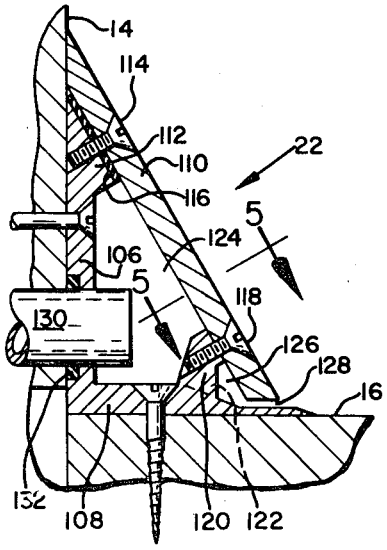
14 Claims, 27 Drawing Figures