US009411085B2

(12) **United States Patent**
Iwasaki

(10) **Patent No.: US 9,411,085 B2**
(45) **Date of Patent: Aug. 9, 2016**

(54) **LIGHT GUIDE PLATE**

(71) Applicant: **FUJIFILM Corporation**, Tokyo (JP)

(72) Inventor: **Osamu Iwasaki**, Ashigara-kami-gun (JP)

(73) Assignee: **FUJIFILM Corporation**, Tokyo (JP)

(*) Notice: Subject to any disclaimer, the term of this patent is extended or adjusted under 35 U.S.C. 154(b) by 114 days.

(21) Appl. No.: **14/546,396**

(22) Filed: **Nov. 18, 2014**

(65) **Prior Publication Data**

US 2015/0070935 A1 Mar. 12, 2015

Related U.S. Application Data

(63) Continuation of application No. PCT/JP2013/060945, filed on Apr. 11, 2013.

(30) **Foreign Application Priority Data**

May 24, 2012 (JP) 2012-118402

(51) **Int. Cl.**
F21V 8/00 (2006.01)
F21V 9/16 (2006.01)
G02F 1/1335 (2006.01)

(52) **U.S. Cl.**
CPC ..... ***G02B 6/0011*** (2013.01); ***F21V 9/16*** (2013.01); ***G02B 6/005*** (2013.01); ***G02B 6/0041*** (2013.01); ***G02B 6/0046*** (2013.01); (Continued)

(58) **Field of Classification Search**
CPC .. G02B 6/0041; G02B 6/0015; G02B 6/0016; G02B 6/0018; G02B 6/0046; G02B 6/0058; G02B 6/0061; F21V 9/16
USPC 362/600–634, 97.1–97.4, 84
See application file for complete search history.

(56) **References Cited**

U.S. PATENT DOCUMENTS

5,899,552 A * 5/1999 Yokoyama G02B 6/0038 349/62
6,206,535 B1 * 3/2001 Hattori G02B 6/0041 362/23.16

(Continued)

FOREIGN PATENT DOCUMENTS

JP H11-153963 A 6/1999
WO 2007/058060 A1 5/2007

OTHER PUBLICATIONS

International Search Report; PCT/JP2013/060945; Jun. 25, 2013.

(Continued)

Primary Examiner — Evan Dzierzynski
Assistant Examiner — Zheng Song
(74) *Attorney, Agent, or Firm* — Studebaker & Brackett PC

(57) **ABSTRACT**

A large-sized thin light guide plate has a first layer on a light exit surface side and a second layer on a rear surface side containing scattering particles at a higher particle concentration than the first layer. Thicknesses of the layers in a direction substantially perpendicular to the light exit surface change to change a combined particle concentration. The scattering particles, obtained by mixing a particle group with an average particle size Ds of less than 7 μm having one or more local maximum values and a particle group with an average particle size Db of more than 7 μm having one or more local maximum values, satisfy 1 μm≤Ds<7 μm, 7 μm<Db≤12 μm and 0.3≤a≤0.5. High light use efficiency, reduction of luminance and color unevenness, a convex brightness distribution and easy manufacture can be achieved.
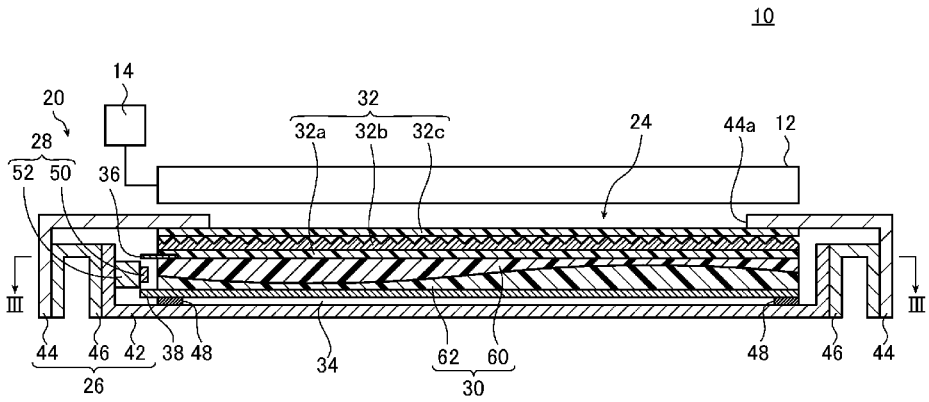
18 Claims, 54 Drawing Sheets