US009410985B2

(12) **United States Patent**
Klein

(10) **Patent No.: US 9,410,985 B2**
(45) **Date of Patent: Aug. 9, 2016**

(54) **PRINTED CIRCUIT BOARD AND MAGNETIC FIELD OR CURRENT SENSOR**

(75) Inventor: **Philippe Klein**, Saint Pierre d'allevard (FR)

(73) Assignee: **Commissariat à l'énergie Atomique et aux énergies alternatives**, Paris (FR)

(*) Notice: Subject to any disclaimer, the term of this patent is extended or adjusted under 35 U.S.C. 154(b) by 132 days.

(21) Appl. No.: **14/343,438**

(22) PCT Filed: **Sep. 6, 2012**

(86) PCT No.: **PCT/EP2012/067453**

§ 371 (c)(1),
(2), (4) Date: **Mar. 7, 2014**

(87) PCT Pub. No.: **WO2013/034659**

PCT Pub. Date: **Mar. 14, 2013**

(65) **Prior Publication Data**

US 2014/0198463 A1 Jul. 17, 2014

(30) **Foreign Application Priority Data**

Sep. 7, 2011 (FR) 11 57932

(51) **Int. Cl.**
H05K 1/18 (2006.01)
H01F 17/00 (2006.01)
(Continued)

(52) **U.S. Cl.**
CPC ***G01R 1/04*** (2013.01); ***G01R 33/04*** (2013.01); ***G01R 33/045*** (2013.01); ***G01R 33/05*** (2013.01);
(Continued)

(58) **Field of Classification Search**
CPC H01F 17/0006; H01F 17/0013; H01F 2017/002; H01F 17/0033; H01F 2017/006; H01F 2017/0066; H01F 2017/008; H01F 17/04; H01F 2017/048
USPC ..... 336/77, 84 R, 84 M, 177, 181, 200, 205, 336/206; 361/748, 760, 761, 762, 782, 818
See application file for complete search history.

(56) **References Cited**

U.S. PATENT DOCUMENTS

6,270,686 B1 8/2001 Tamura
6,747,450 B2 * 6/2004 Kang G01R 33/05 324/253

(Continued)

FOREIGN PATENT DOCUMENTS

CZ 301546 4/2010
FR 2647908 12/1990

(Continued)

OTHER PUBLICATIONS

Jan Kubik et al. "Magnetometer with Pulse-Excited Miniature Flxgate Sensors"; Journal of Electrical Engineering, 57(8/S):80-83 (2006) XP007921181.

(Continued)

Primary Examiner — Hoa C Nguyen
Assistant Examiner — Binh Tran
(74) *Attorney, Agent, or Firm* — Occhiuti & Rohlicek LLP

(57) **ABSTRACT**

A printed circuit has a creep suppressor and a stack of metallization layers separated by electrically insulating layers. A metallization layer arranged above the insulating layer at least partially covers a cavity formed in the latter's top face. Prepreg arranged directly on the insulating layer below the metallization layer bonds the layers together. A magnetic core is housed in the cavity leaves at least a five micrometer gap between the cavity's vertical walls and roof and the core's facing vertical and top faces. During stack assembly, the creep suppressor prevents prepreg from flowing, by creep, into the cavity until it contacts more than 20% of the core's top face.
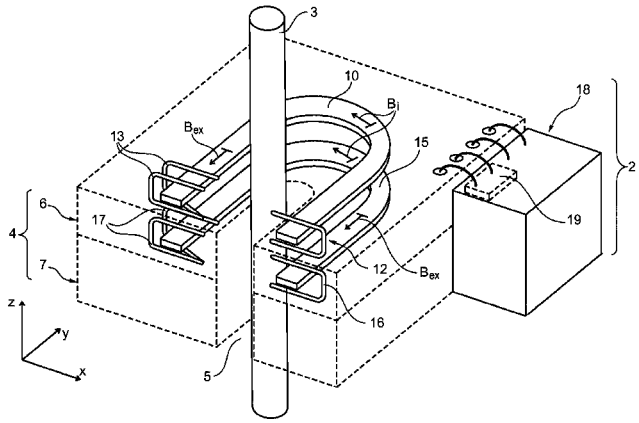
6 Claims, 7 Drawing Sheets