US005310185A

United States Patent [19]

Viollaz et al.

[11] Patent Number: 5,310,185

[45] Date of Patent: May 10, 1994

[54] GOLF CLUB HEAD AND PROCESSES FOR ITS MANUFACTURE

[75] Inventors: **Francois Viollaz**, Evian; **Benoit Vincent**, Annecy le Vieux, both of France

[73] Assignee: **Taylor Made Golf Company**, Carlsbad, Calif.

[21] Appl. No.: **24,400**

[22] Filed: **Mar. 1, 1993**

[30] **Foreign Application Priority Data**

Feb. 27, 1992 [FR] France 92 02554

[51] **Int. Cl.**[5] **A63B 53/04**

[52] **U.S. Cl.** ..... **273/167 H**; 273/167 J; 273/78; 273/DIG. 23; 273/173; 29/428

[58] **Field of Search** ..... 273/77 R, 162 R, 164.1, 273/193 R, 194 R, 79, 167 R-177 A, DIG. 23; 29/428, 469, 469.5, 527.5; 156/245; 264/46.7, 299

[56] **References Cited**

U.S. PATENT DOCUMENTS

1,253,700	1/1918	McLaughlin	273/167 H
2,056,335	10/1936	Wettlaufer	273/171 X
3,190,651	6/1965	Thomas	273/173 X
4,214,754	7/1980	Zebelean	273/171 X
4,438,931	3/1984	Motomiya	273/80.2 X
4,618,149	10/1986	Maxel	273/167 X
4,681,321	7/1987	Chen	273/167 H
4,928,965	5/1990	Yamaguchi	273/78
4,940,236	7/1990	Allen	273/194 X
4,984,800	1/1991	Hamada	273/173
5,000,454	3/1991	Soda	273/167 H
5,106,094	4/1992	Desbiolles	273/167 H
5,141,231	8/1992	Cox	273/173
5,221,087	6/1993	Fenton	273/173

FOREIGN PATENT DOCUMENTS

211781	12/1957	Australia	273/173
4288173	4/1992	Japan	273/167 J
2124911	2/1984	United Kingdom	273/173
2132902	7/1984	United Kingdom .	
2173407	10/1986	United Kingdom .	

Primary Examiner—Vincent Millin
Assistant Examiner—Sebastiano Passaniti
Attorney, Agent, or Firm—Pollock, Vande Sande & Priddy

[57] **ABSTRACT**

Golf club head comprising a shell extended laterally by a neck, said shell being constituted by a series of metal plates forming an interior cavity, whose front plate incorporates a support surface to which a hitting plate made of a plastic or composite material is attached. The support face of the front plate is a convex surface extending forward, and the hitting plate associated with it is such that its rear plate, which is supported on the support face, has a matching shape, while the hitting surface is a convex surface extending forward.
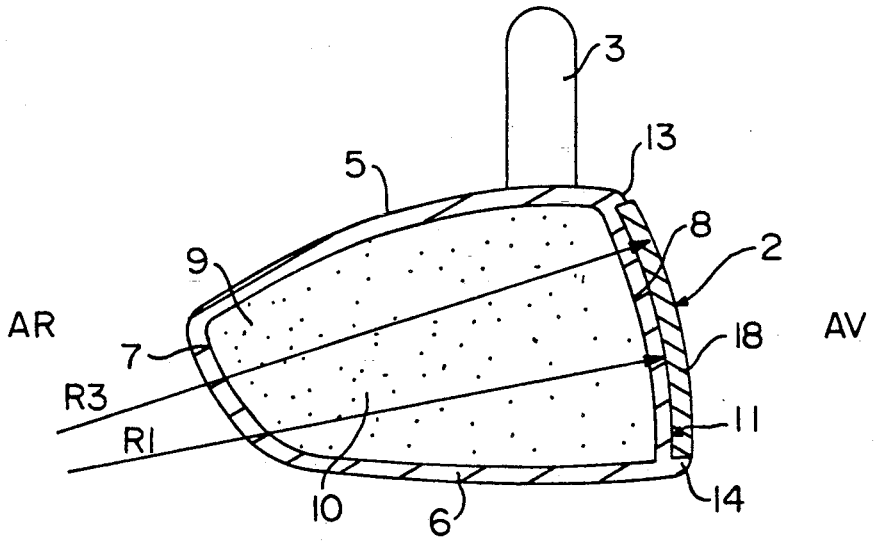
17 Claims, 8 Drawing Sheets