US009409285B2

(12) **United States Patent**
Ivinson et al.

(10) **Patent No.: US 9,409,285 B2**
(45) **Date of Patent: Aug. 9, 2016**

(54) **BASE FOR DISPOSABLE SELECTABLE TORQUE LIMITING DEVICE**

(71) Applicant: **ECA Medical Instruments**, Newbury Park, CA (US)

(72) Inventors: **David Ivinson**, Camarillo, CA (US); **John Nino**, Simi Valley, CA (US)

(73) Assignee: **ECA Medical Instruments**, Newbury Park, CA (US)

(*) Notice: Subject to any disclaimer, the term of this patent is extended or adjusted under 35 U.S.C. 154(b) by 0 days.

(21) Appl. No.: **14/627,877**

(22) Filed: **Feb. 20, 2015**

(65) **Prior Publication Data**

US 2015/0165608 A1 Jun. 18, 2015

Related U.S. Application Data

(63) Continuation of application No. PCT/US2013/040768, filed on May 13, 2013.

(60) Provisional application No. 61/694,980, filed on Aug. 30, 2012.

(51) **Int. Cl.**

B25B 23/157	(2006.01)
B25B 23/142	(2006.01)
B25B 15/02	(2006.01)
B25B 23/00	(2006.01)
A61B 17/88	(2006.01)

(52) **U.S. Cl.**

CPC ***B25B 23/1427*** (2013.01); ***A61B 17/8875*** (2013.01); ***B25B 15/02*** (2013.01); ***B25B 23/0042*** (2013.01); *Y10T 29/4984* (2015.01)

(58) **Field of Classification Search**

CPC B25B 23/1427; B25B 23/0042; B25B 15/02; A61B 17/8875; Y10T 29/4984

USPC 81/474–478, 467, 473–475

See application file for complete search history.

(56) **References Cited**

U.S. PATENT DOCUMENTS

3,003,378	A *	10/1961	Hotchner	B25B 23/00	29/509
3,068,667	A *	12/1962	Sussman	F16D 7/044	464/23
3,168,944	A *	2/1965	Zimmerman	B25B 23/141	192/56.53
3,613,751	A *	10/1971	Juhasz	B25B 21/00	192/150
3,695,059	A *	10/1972	Laubach	F16D 7/044	464/23
3,702,546	A *	11/1972	Schnepel	F16D 7/08	464/36
4,272,973	A *	6/1981	Fu-Tsai	B25B 23/141	464/23
5,746,298	A *	5/1998	Krivec	B25B 15/02	192/48.3
6,132,435	A *	10/2000	Young	B25B 23/141	192/56.54
6,640,674	B1 *	11/2003	Rinner	B25B 23/1427	81/473
7,272,998	B1 *	9/2007	Gauthier	B25B 23/1427	81/473
7,334,509	B1 *	2/2008	Gao	B25B 15/02	81/467

(Continued)

FOREIGN PATENT DOCUMENTS

WO 2005-077603 8/2005

Primary Examiner — Hadi Shakeri
Assistant Examiner — Danny Hong
(74) *Attorney, Agent, or Firm* — Baker & Hostetler LLP

(57) **ABSTRACT**

A unitary base for a torque limiting device is disclosed. The base accepting a plurality of swappable torque limiting fixtures (STLF), whereby a single unitary disposable plastic base may be utilized to form a variety of different specific torque limiting devices and a method to construct and configure such a device.
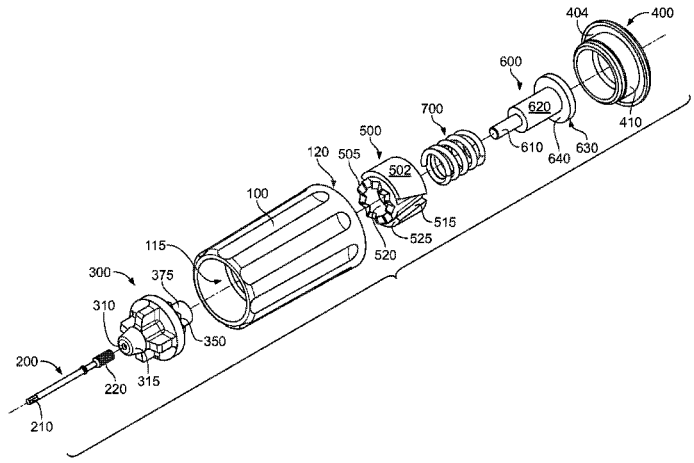
4 Claims, 7 Drawing Sheets