FIG. 1A

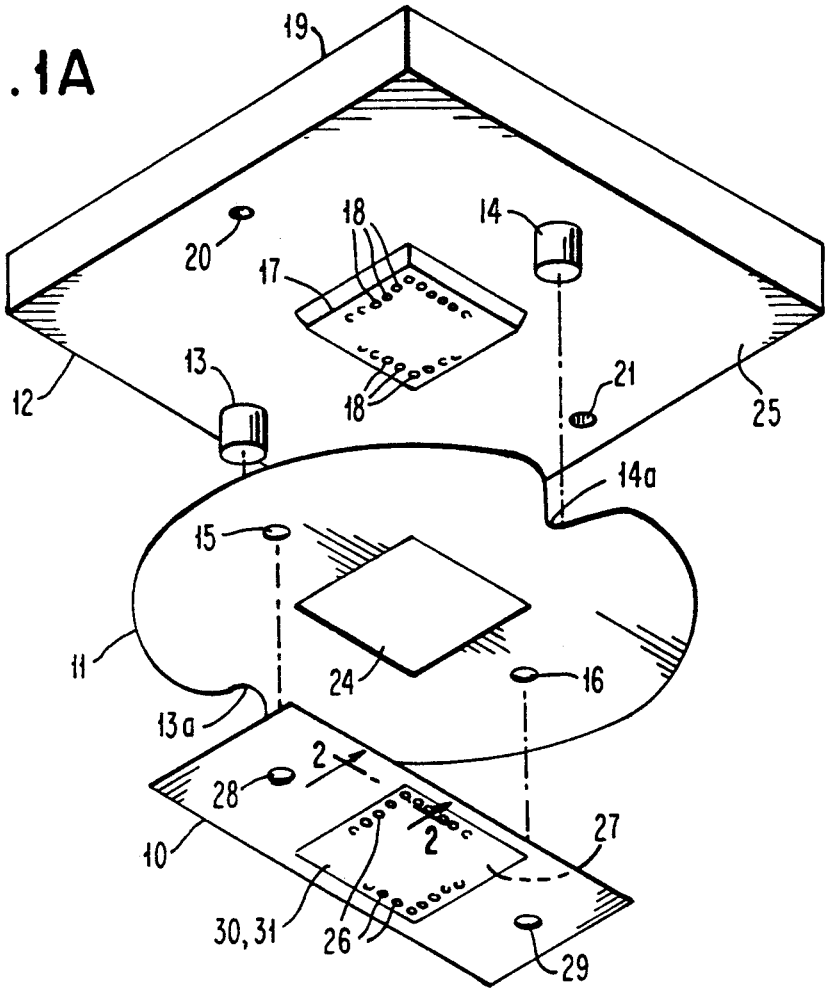
19
20
18
14
17
13
21
12
18
25
14a
15
11
24
16
13a
2
28
2
27
10
30, 31
26
29

FIG. 1B

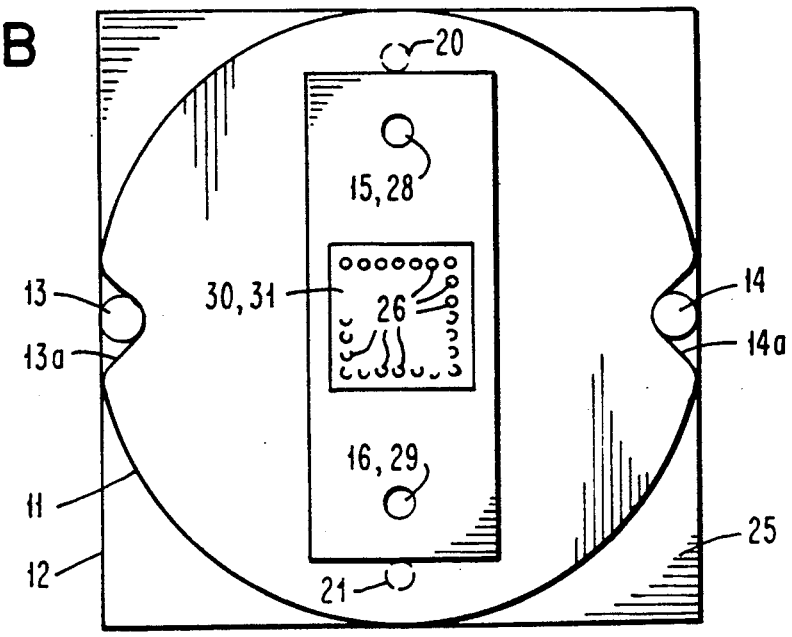
20
15, 28
13
30, 31
26
14
13a
14a
16, 29
11
25
12
21