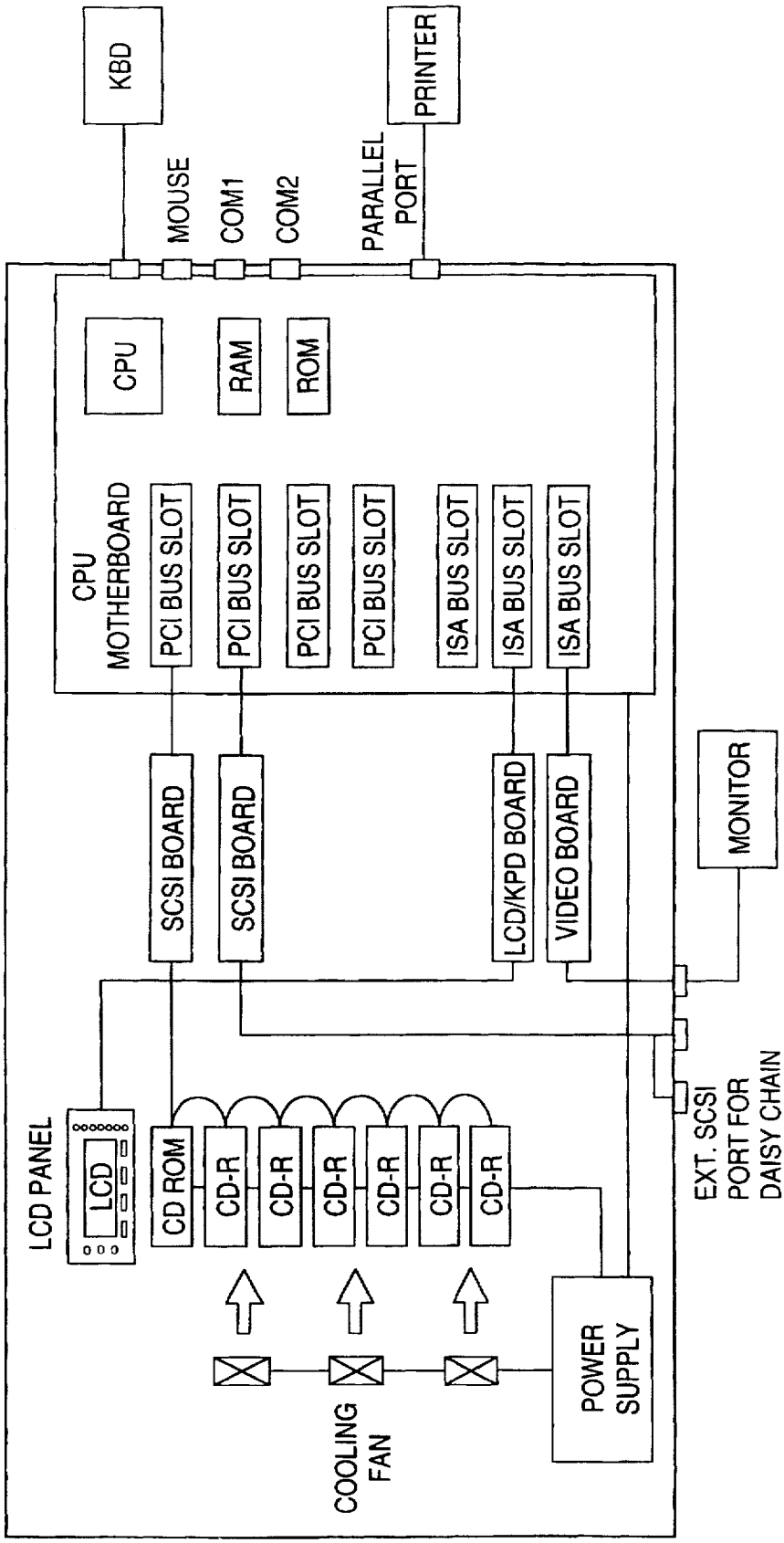
KBD
MOUSE
COM1
COM2
PARALLEL PORT
PRINTER
CPU
RAM
ROM
CPU MOTHERBOARD
PCI BUS SLOT
PCI BUS SLOT
PCI BUS SLOT
PCI BUS SLOT
ISA BUS SLOT
ISA BUS SLOT
ISA BUS SLOT
SCSI BOARD
SCSI BOARD
LCD/KPD BOARD
VIDEO BOARD
MONITOR
LCD PANEL
LCD
CD ROM
CD-R
CD-R
CD-R
CD-R
CD-R
CD-R
EXT. SCSI PORT FOR DAISY CHAIN
COOLING FAN
POWER SUPPLY

FIG. 5