US005688584A

United States Patent [19]

Casson et al.

[11] Patent Number: 5,688,584

[45] Date of Patent: Nov. 18, 1997

[54] **MULTILAYER ELECTRONIC CIRCUIT HAVING A CONDUCTIVE ADHESIVE**

[75] Inventors: **Keith L. Casson**, Northfield; **Carol Myers**, Faribault, both of Minn.; **Kenneth B. Gilleo**, W. Kingston, R.I.; **Deanna Suilmann**, Bloomer, Wis.; **Edward Mahagnoul**, Faribault; **Marion Tibesar**, Northfield, both of Minn.

[73] Assignee: **Sheldahl, Inc.**, Northfield, Minn.

[21] Appl. No.: **534,630**

[22] Filed: **Sep. 27, 1995**

Related U.S. Application Data

[60] Division of Ser. No. 1,811, Jan. 8, 1993, Pat. No. 5,502,889, which is a continuation-in-part of Ser. No. 925,954, Aug. 5, 1992, abandoned, which is a continuation of Ser. No. 206,086, Jun. 10, 1988, abandoned.

[51] **Int. Cl.**[6] **B32B 9/00**

[52] **U.S. Cl.** ..... **428/209**; 428/901; 428/355 EP; 428/356; 361/751; 174/259

[58] **Field of Search** 428/209, 901, 428/148, 156, 172, 200, 206, 213, 323, 328, 343, 349, 355, 356; 174/52.4, 259; 439/67; 427/96; 361/751

[56] **References Cited**

U.S. PATENT DOCUMENTS

2,808,352	10/1957	Coleman et al.	117/227
3,148,310	9/1964	Feldman	317/101
3,205,299	9/1965	Dickie	174/84
3,320,658	5/1967	Bolda et al.	29/155.5
3,334,040	8/1967	Conrad et al.	204/266
3,359,145	12/1967	Salyer et al.	156/1
3,421,961	1/1969	Joyce	156/296
3,475,213	10/1969	Stow	117/227
3,491,056	1/1970	Saunders et al.	260/41
3,541,222	11/1970	Parks et al.	174/68.5
3,680,037	7/1972	Nellis et al.	339/61

(List continued on next page.)

FOREIGN PATENT DOCUMENTS

147856	7/1985	European Pat. Off. .
170703	2/1986	European Pat. Off. .
265077	4/1988	European Pat. Off. .
265212	4/1988	European Pat. Off. .
346525	12/1989	European Pat. Off. .
407108 A1	1/1991	European Pat. Off. .
2475302	2/1993	France .
1065052	3/1993	Germany .
58-023174	2/1983	Japan .
61-49499	5/1986	Japan .
62-023198	3/1987	Japan .
2068645	8/1981	United Kingdom .
2123224	1/1984	United Kingdom .
WO 93/06943	4/1993	WIPO .

OTHER PUBLICATIONS

Adachi, Kohei, "Packaging Technology for Liquid Crystal Displays", *Solid State Technology*, Jan. 1993, pp. 63–71.

Bolger, "Conductive Adhesives", Handbook of Adhesives, pp. 705–712 (date unknown).

Crea, John J., et al., "Development of a Z–Axis Adhesive Film for Flex Circuit Interconnects and Tab Outer Lead Bonding", Reprint NEPCON West '91 Proceedings, pp. 251–259.

(List continued on next page.)

Primary Examiner—Patrick Ryan
Assistant Examiner—Patrick Jewik
Attorney, Agent, or Firm—Merchant, Gould, Smith, Edell, Welter & Schmidt, P.A.

[57] **ABSTRACT**

A multilayer circuit board having three or more conductive layers, with at least two conductive layers electrically and mechanically connected by an interconnecting adhesive layer, is disclosed. The interconnecting adhesive layer comprises a conductive adhesive material having a plurality of deformable, heat fusible metallic particles dispersed substantially throughout a non-conductive adhesive. The fabricated multilayer circuit boards have interconnections which are reliable, heat resistant, and capable of withstanding thermal cycling and typical circuit board finishing and assembly processes.
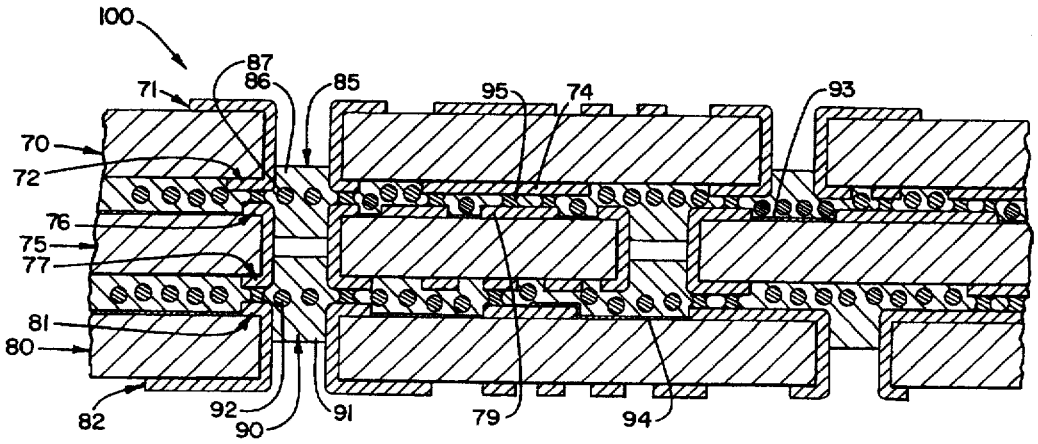
18 Claims, 3 Drawing Sheets