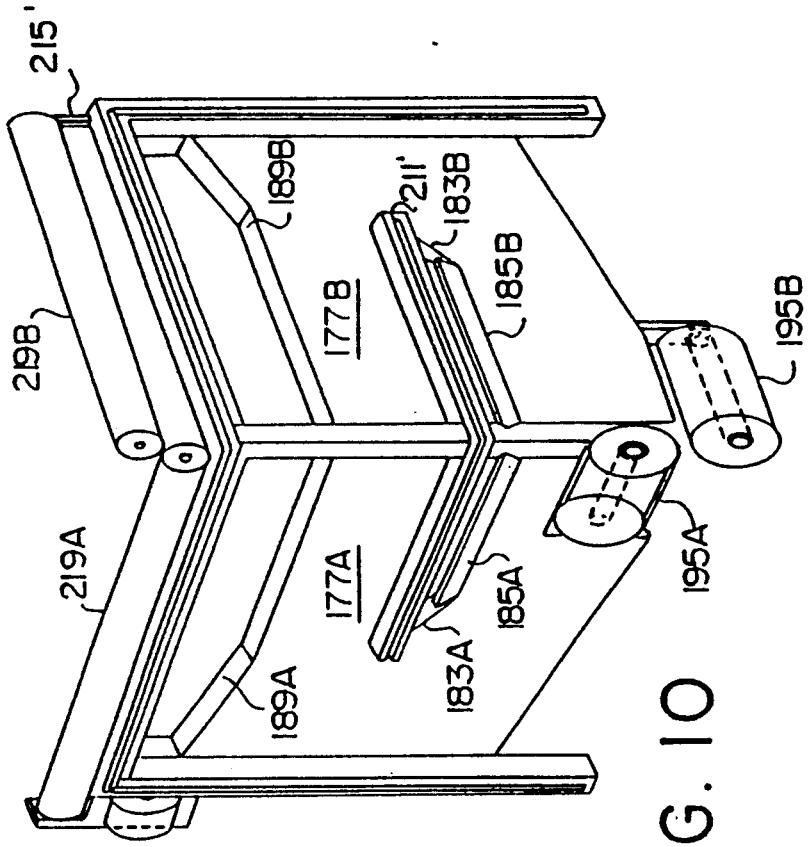
215'
219B
189B
211'
183B
185B
177B
195B
219A
177A
185A
195A
183A
189A

FIG. 10